CNTD®

INDUSTRIAL AUTOMATION

限位开关事业部 2019

Limit Switch Division

昌得电气科技有限公司

CNTD ELECTRIC TECHNOLOGY CO., LTD.

CNTD®
昌得电气·智享其能
INGENUITY DESIGNS, PERFECTIONISM MAKES
可靠的战略合作伙伴
Reliable Industrial Automation Partner

CNTD® 昌得电气

公司简介

CNTD INTRODUCTION

昌得电气科技有限公司，位于浙江省乐清经济开发区，从 2000 年起就专注于工控开关领域。我们以“质量第一，信誉至上”为信条，砥砺前行，如今已成为行业中的佼佼者。作为国内领先的工控开关制造商和数个世界五百强企业的合作伙伴，昌得电气科技有限公司一直致力于为客户提供最专业的工控开关与传感器解决方案。

昌得电气科技有限公司拥有优秀的开发团队和完善的研发设备。以创新与追求完美为基石，用以先进的设计理念和方法，我们如今能呈现给客户多种高可靠性、高性价比的限位开关、微动开关（卧式限位开关）、接近开关、光电开关、密封型限动开关、门式安全开关、动力押扣开关、脚踏开关、钮子开关、接线端子等系列产品。

目前昌得电气的产品获得了国家 CCC 认证和德国 TUV 实验室出具的欧盟 CE 认证。同时，因深厚的技术积淀，昌得电气也有足够的实力为客户定制在更严苛的环境中使用的非标准产品以及获取针对该类产品的欧盟 ROHS、欧盟 REACH 和美国 UL 等认证。用自身的技术力量去解决客户的问题，是昌得电气不变的追求。

作为广大客户的可靠供应商，昌得电气科技有限公司对产品的制造有着非常严苛的管控。专业技能过硬的质量控制团队在从研发，生产到出库中每个细小环节都进行严格的品质把关；物控团队负责供应链管理，通过制定高效的采购，仓储和配送策略，实现产品的快捷交付；工业化团队致力于智能制造，是产品生产现场效率和制程稳定性的有力保证。

昌得电气科技有限公司的服务是产品价值的延伸。我们有针对国内客户、国外客户和大型项目的专业服务团队以及经验丰富的现场服务工程师。不管我们的客户来自哪里，处于什么行业，我们都能做到及时的响应和专业的服务，因此，昌得电气科技有限公司正成为越来越多客户的可靠支持者。

CNTD Electric Technology Co., Ltd., located at Yueqing Economic development zone, Zhejiang, China, has been specializing in industrial automation used switches since 2000, and is now an exemplary enterprise in our industry. As a leading industrial automation switch manufacturer and partner of many world top 500 companies, CNTD has been devoting to serving customers with both professional switch and sensor solutions.

CNTD Electric Technology Co., Ltd. has been led by the experienced R&D team and equipped with abundant developing devices. Innovation and perfectionism are our creeds. Guided by advanced designing theories and methods, we are able to provide various of cost-efficient products including Vertical Limit Switches, Horizontal Limit Switches, Pushbutton Switches, Power Pushbutton Switches, Monolever Switches, Foot Switches, Toggle Switches, Proximity Sensors, Photoelectronic Sensors, Control Boxes and Terminal Blocks.

CNTD's products now have certifications including China Compulsory Certification and CE certificates by TÜV Rheinland. Due to our continuing exploration in technology, we have strong ability to customize products for harsher using environment and outfit corresponding ROHS, RECAH, UL or any other required certificates. Satisfying customers' needs utilizing our technical strength has always been our persistent pursuit.

As a reliable supplier of our customers, CNTD has quite strict control on quality and efficiency. CNTD has established a tracible management system from product designing, material purchasing, workblank producing, accessories processing, product assembling to finished product delivery. Professional quality control team supervises all the quality details from R&D, production to outbound. PMC team oversees supply chain management by thorough planning on purchasing, warehousing and dispatching. Industrial team is acting as the backbone of high production efficiency and stability by updating production equipment and lines. Strict control over quality cost, constant supply chain improvements and high production efficiency are always what enabling us to provide cost-efficient switches and sensors.

Excellent Service is a value adding for our high-quality products. We now have specialized teams serving Chinese customers, foreign customers and large projects customers, all supported by our experienced field service engineers. No matter which country our customers are coming from and what industry our customers are in, we can always response timely with our thoughtful service. For this reason, CNTD has now become a strong partner for more and more customers.

Ingenuity designs, Perfectionism makes. CNTD Electric Technology Co., Ltd.

强大的研发及制造能力

R&D / MANUFACTURE

研发 R&D

CNTD 只专注于工业自动化行业，在产品设计开发上，我们拥有一支强大的研发团队，保证设计成型的产品不仅仅是科技的结晶，更是一件艺术品。

CNTD only focus on industrial automation. For R&D, we have a professional team to make our product both crystallization of science and work of art.

制造 MANUFACTURE

为了使我们的设计及解决方案能够完美地呈现出来，我们配备了一支专业的技术生产团队，配以先进的制造及检测设备，最终满足广大客户的质量需求。这也是 CNTD 的优良品质在业内载誉无数的原因之一。

To present our designs and solutions to our customer, winning a good reputation, we have organized a professional production team supported by advanced manufacturing and testing equipment.

专业的检测
及技术支持

QUALITY CONTROL / SUPPORT

检测 QUALITY CONTROL

严格的监测是产品质量的保证。不让一点瑕疵出现，不让质量问题损害 CNTD 的品牌是我们的宗旨。我们建立了一整套合理的有序的检测程序，在“我们追求 0 故障”思想的指导下，CNTD 绝不让一件不合格产品出厂，我们相信这既是对客户负责，更是对我们自己负责。

Good quality is always based on strict quality control. No tolerance on quality problem is our principle to keep CNTD's brand image. For this, we have set a series of rigorous tests. We believe “0.0% failure rate” is our duty both to our customer and ourselves.

支持 SUPPORT

为确保 CNTD 产品能够在世界各个工程项目中保持正常运行状态，我们庞大的售后技术支持人员一直保持与客户的密切的联系，为客户所碰到的技术问题给予耐心及专业地解答。为客户分忧解难，是我们一直追求的目标。

To ensure the trouble-free using of our product, our professional customer-service teams are always ready to communicate with our customer and provide any kind of support. To solve our customers' problem is our eternal pursuit.

权威的认证
及荣誉资质

CERTIFICATION

公司获得 ISO9001:2008 质量管理体系认证
ISO9001:2008 quality management system certificate

公司获得中国 CCC 产品质量认证
China CCC product quality certificate

公司获得 CTS 出具的 CE 认证（LVD 部分）
CE certificate（LVD）by CTS

公司获得 TUV 出具的 CE 认证（LVD 部分）
CE certificate（LVD）by TUV Rheinland

CNTD® 昌得电气

产品目录

CATALOG

立式限位开关
Vertical Limit Switch

TZ-8 立式限位开关 01-02
TZ-8 Vertical Limit Switch

CZ-8 □ N 立式限位开关 03-04
CZ-8 □ N Vertical Limit Switch

CSA 立式限位开关 05-06
CSA Vertical Limit Switch

CWL 立式限位开关 07-09
CWL Vertical Limit Switch

CHL 立式限位开关 10-11
CHL Vertical Limit Switch

TZ-6 卧式限位开关 12-13
TZ-6 Horizontal Limit Switch

CZ-93 立式安全门限位开关 14-15
CZ-93 Vertical Interlock Safety Limit Switch

CZ-3 立式限位开关 16-18
CZ-3 Vertical Limit Switch

CLS 立式限位开关 19-22
CLS Vertical Limit Switch

C4N 立式安全限位开关 23-27
C4N Vertical Safety Limit Switch

C4N- □ R 立式手动复位限位开关 28-31
C4N- □ R Vertical Manual Reset Safety Limit Switch

C4B- □ N 立式安全限位开关 32-35
C4B- □ N Vertical Safety Limit Switch

卧式限位开关
Horizontal Limit Switch

CM 卧式限位开关 36-39
CM Horizontal Limit Switch

CM- □ N 卧式限位开关 40-42
CM- □ N Horizontal Limit Switch

CZ-7 卧式限位开关 43-44
CZ-7 Horizontal Limit Switch

CMV10 小型微动开关 45-46
CMV10 Miniature Snap Action Switch

CMV16 小型微动开关 47-48
CMV16 Miniature Snap Action Switch

脚踏开关
Foot Switch

CFS 脚踏开关 49-50
CFS Foot Switch

动力押扣开关
Power Pushbutton Switch

CB 动力押扣开关 51-52
CB Power Pushbutton Switch

钮子开关
Toggle Switch

C5 钮子开关 53-54
C5 Toggle Switch

十字开关
Monolever Switch

CMR 十字开关 55-56
CMR Monolever Switch

按钮开关、控制盒
Pushbutton Switch, Control Box

C2、C3 按钮开关 57-61
C2,C3 Pushbutton Switch

控制盒 61
Control Box

小型功率继电器
Miniature General Purpose Relay

CK 小型功率继电器 62-64
CK Miniature General Purpose Relay

接线端子
Connection Terminal

CUK 通用接线端子 65-67
CUK General Connection Terminal

CBD 双层板式螺钉压线端子 67
CBD Double-layer Plate Type Screw Crimping Terminal

CUSLKG 通用接地端子 68
CUSLKG General Earthing Terminal

CBC 卡式组立端子盘 69
CBC Cassette Assembly Terminal Block

CBR 板式螺钉压线端子排 70
CBR Plate Type Screw Crimping Terminal Block

CUK 端子附件 71
CUK Terminal Attachment

TZ-8 立式限位开关 Vertical Limit Switch

特点 Features

- 双回路型限动开关
- 结构坚固，由锌合金及强化塑胶组成
- 体积小，可防水、防油
- 内藏触点座有双簧片机构，机械寿命更长
- 具有较大的过行程
- 使配线更加简易的导管设计
- 引动器种类多，方便使用

- Double circuit type of limit switch
- High mechanical strength, consists of intensive plastic and aluminum cast
- Small size, water-proof and oil-proof construction
- Built-in contact box has double-spring and long mechanical life
- Smooth operation with larger over travel distance
- Conduit design for convenient cabling
- Various actuators for different applications

接点型式 Contact Form

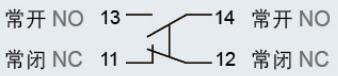

额定值 Ratings

额定电压 Rated Voltage	非电感性负载 Noninductive Load (A)				电感性负载 Inductive Load (A)			
	电阻性负载 Resistance Load		灯泡负载 Lamp Load		电感性负载 Inductive Load		马达负载 Motor Load	
	NC	NO	NC	NO	NC	NO	NC	NO
125VAC	5	5	1.5	0.7	3	3	2	1
250VAC	5	5	1	0.5	3	3	1.5	0.8
8VDC	5	5	3	3	5	4	3	3
14VDC	5	5	3	3	4	4	3	3
30VDC	5	5	3	3	4	4	3	3
125VDC	0.4	0.4						
250VDC	0.2	0.2						
突入电流 Inrush Current	N.C.:24A 以下、N.O.:12A 以下 N.C: below 24A, N.O: below 12A							

注 :1、电感性负载之功率因素在 0.4 以上 (AC)。时间常数在 7msec 以下 (DC)。
2、灯泡负载之突入电流为稳定状态电流之 10 倍。马达负载之突入电流为稳定状态电流之 6 倍。
3、带弹簧系列产品，操作体的使用范围为从弹簧的前端到弹簧全长的 1/3 以内。

NOTES: 1.Inductive load has a power factor of 0.4 min.(AC) and a time constant of 7 msec. max.(DC).
2.Lamp load has an inrush current of 10 times the steady-state current,while motor load has an inrush current of 6 times the steady-state current.
3.Product with spring, its usable range of operating part is within one third of the whole spring length from the front end of spring.

规格 Specifications

操作速度 Operation speed	5mm 至 0.5m/s 5mm-0.5m/s
动作频率 Operating frequency	电气 :30 次 / 分 Electical: 30 operations/min
接点电阻 Contact resistance	25mΩ 以下 (初期) 25mΩ max. (initial value)
绝缘电阻 Insulation resistance	100MΩ 以上 (在 500VDC 下) 100mΩ min. (below 500VDC)
电介强度 Dielectric strength	非连续端子间 1,000VAC, 50/60Hz 持续 1 分钟 1000VAC, 50/60 Hz for 1 minute between terminals of the same polarity
	载电流与无载电流零件间 1,500VAC, 50/60Hz 持续 1 分钟 1500VAC, 50/60 Hz for 1 minute between current-carrying and non-current-carrying metal parts
	端子和接地之间 1,500VAC, 50/60Hz 持续 1 分钟 1500VAC, 50/60 Hz for 1 minute between each terminal and ground
振动 Vibration	10 至 55Hz, 1.5mm 双振幅 10-55Hz,1.5mm double amplitude
冲击 Shock	机械耐久 :1,000m/Sec²(约 100G' S) 误动作耐久 :300m/Sec²(约 30G' S) Mechanical durable: 1, 000m/Sec² (about 100G'S) Malfunction: 300m/Sec² (about 30G'S)
周围温度 Ambient temperature	使用时 :-20~+70℃ (没有结冰) Using: -20~+70℃ (With no icing)
湿度 Humidity	95%RH 以下 <95% RH
电气寿命 Electrical life	500,000 次以上 500,000 operations above
保护构造 Degree of protection	IP65

动作特性 Operating Characteristics

型号	Model	TZ-8	TZ-8104 TZ-8105	TZ-8108 TZ-8109	TZ-8107	TZ-8111	TZ-8112/8122	TZ-8166/8167/8168/8169
操作力	Operating force	OF(最大)(Max.)	750g	750g	750g	900g	900g	150g
回弹力	Release force	RF(最小)(Min.)	100g	100g	100g	150g	150g	-
预行程	Pre-travel	PT(最大)(Max.)	20°	20°	20°	1.5mm	1.5mm	30mm
过行程	Over travel	OT(最小)(Min.)	50°	50°	50°	4mm	4mm	-
行程移动分辨率	Movement differential	MD(最大)(Max.)	12°	12°	12°	1mm	1mm	-
动作位置	Operating position	OP(mm.)	-	-	-	26 ± 0.8mm	37 ± 0.8mm	-

外观和尺寸 Appearance and Dimension

TZ-8104

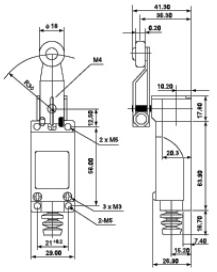

TZ-8105

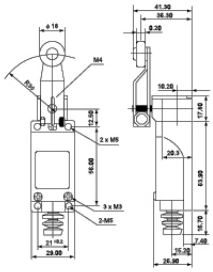

TZ-8107

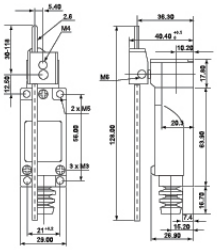

TZ-8108

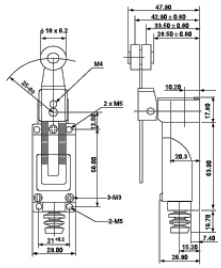

TZ-8109

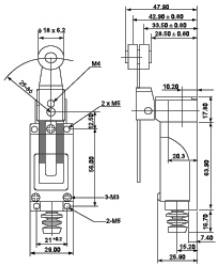

TZ-8111

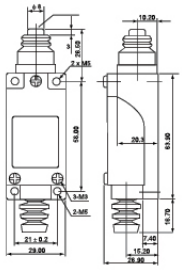

TZ-8112

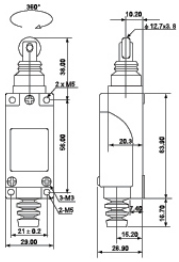

TZ-8122

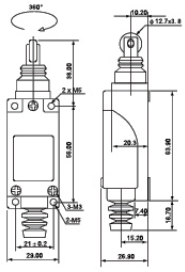

TZ-8166

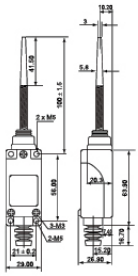

TZ-8167

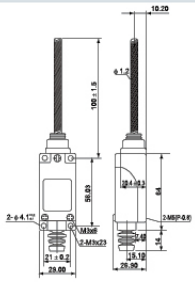

TZ-8168

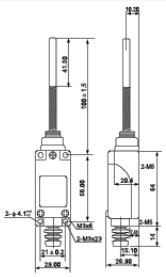

TZ-8169

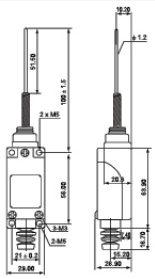

CZ-8□N 立式限位开关 Vertical Limit Switch

特点 Features

- 双回路型限动开关
- 结构坚固，由锌合金及强化塑胶组成
- 体积小，可防水、防油
- 内藏触点座有双簧片设计，机械寿命长
- 具有较大的过行程
- 引动器种类多，方便使用
- 优化尾部出线设计，以提高密封性能

- Double circuit type of limit switch
- High mechanical strength, consists of intensive plastic and aluminum cast
- Small size, water-proof and oil proof construction
- Built-in contact box has double-spring and long mechanical life
- Smooth operation with larger over travel distance
- Various actuators for different application
- Optimize tail line design to improve sealing performance

接点型式 Contact Form

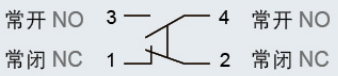

额定值 Ratings

额定电压 Rated Voltage	非电感性负载 Noninductive Load (A)				电感性负载 Inductive Load (A)			
	电阻性负载 Resistance Load		灯泡负载 Lamp Load		电感性负载 Inductive Load		马达负载 Motor Load	
	NC	NO	NC	NO	NC	NO	NC	NO
125VAC	5	5	1.5	0.7	3	3	2	1
250VAC	5	5	1	0.5	3	3	1.5	0.8
8VDC	5	5	3	3	5	4	3	3
14VDC	5	5	3	3	4	4	3	3
30VDC	5	5	3	3	4	4	3	3
125VDC	0.4	0.4						
250VDC	0.2	0.2						
突入电流 Inrush Current	N.C.:24A 以下、N.O.:12A 以下 N.C: below 24A, N.O: below 12A							

注 :1、电感性负载之功率因素在 0.4 以上 (AC)。时间常数在 7msec 以下 (DC)。
2、灯泡负载之突入电流为稳定状态电流之 10 倍。马达负载之突入电流为稳定状态电 流之 6 倍。
3、带弹簧系列产品，操作体的使用范围为从弹簧的前端到弹簧全长的 1/3 以内。

NOTES: 1.Inductive load has a power factor of 0.4 min.(AC) and a time constant of 7 msec. max.(DC).
2.Lamp load has an inrush current of 10 times the steady-state current,while motor load has an inrush current of 6 times the steady-state current.
3.Product with spring, its usable range of operating part is within one third of the whole spring length from the front end of spring.

规格 Specifications

操作速度 Operation speed	5mm 至 0.5m/s 5mm-0.5m/s
动作频率 Operating frequency	电气 :30 次 / 分 Electical: 30 operations/min
接点电阻 Contact resistance	25mΩ 以下 (初期) 25mΩ max. (initial value)
绝缘电阻 Insulation resistance	100MΩ 以上 (在 500VDC 下) 100mΩ min. (below 500VDC)
电介强度 Dielectric strength	非连续端子间 1,000VAC, 50/60Hz 持续 1 分钟 1000VAC, 50/60 Hz for 1 minute between terminals of the same polarity
	载电流与无载电流零件间 1,500VAC, 50/60Hz 持续 1 分钟 1500VAC, 50/60 Hz for 1 minute between current-carrying and non-current-carrying metal parts
	端子和接地之间 1,500VAC, 50/60Hz 持续 1 分钟 1500VAC, 50/60 Hz for 1 minute between each terminal and ground
振动 Vibration	10 至 55Hz, 1.5mm 双振幅 10-55Hz,1.5mm double amplitude
冲击 Shock	机械耐久 :1,000m/Sec²(约 100G' S) 误动作耐久 :300m/Sec²(约 30G' S) Mechanical durable: 1, 000m/Sec² (about 100G'S) Malfunction: 300m/Sec² (about 30G'S)
周围温度 Ambient temperature	使用时 :-20~+70℃ (没有结冰) Using: -20~+70℃ (With no icing)
湿度 Humidity	95%RH 以下 <95% RH
电气寿命 Electrical life	500,000 次以上 500,000 operations above
保护构造 Degree of protection	IP65

动作特性 Operating Characteristics

型号	Model	CZ-8 □ N	CZ-8104N CZ-8105N	CZ-8108N CZ-8109N	CZ-8107N	CZ-8111N	CZ-8112N CZ-8122N	CZ-8166N/8167N/8168N/8169N
操作力	Operating force	OF(最大)(Max.)	750g	750g	750g	900g	900g	150g
回弹力	Release force	RF(最小)(Min.)	100g	100g	100g	150g	150g	-
预行程	Pre-travel	PT(最大)(Max.)	20°	20°	20°	1.5mm	1.5mm	30mm
过行程	Over travel	OT(最小)(Min.)	50°	50°	50°	4mm	4mm	-
行程移动分辨率	Movement differential	MD(最大)(Max.)	12°	12°	12°	1mm	1mm	-
动作位置	Operating position	OP(mm.)	-	-	-	26 ± 0.8mm	37 ± 0.8mm	-

外观和尺寸 Appearance and Dimension

CZ-8104N

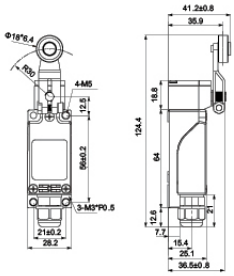

TZ-8105N

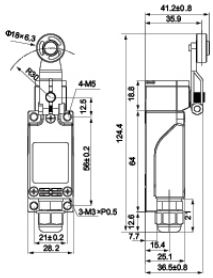

CZ-8107N

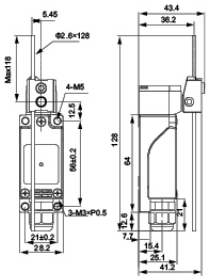

CZ-8108N

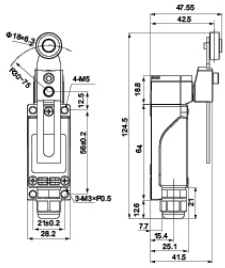

CZ-8109N

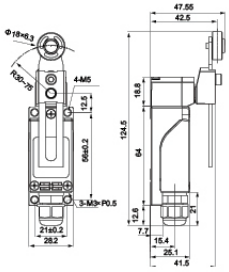

CZ-8111N

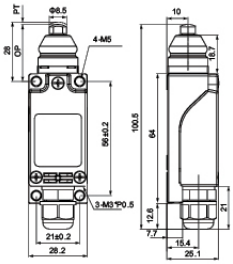

CZ-8112N

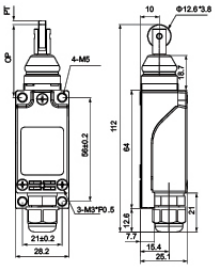

CZ-8122N

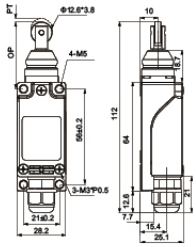

CZ-8166N

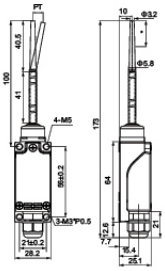

CZ-8167N

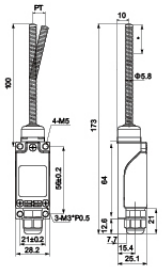

CZ-8168N

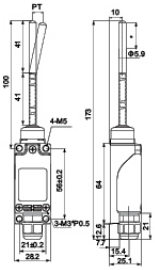

CZ-8169N

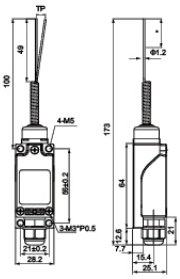

CSA 立式限位开关
Vertical Limit Switch

特点 Features

- 双回路型限动开关
- 结构坚固，由锌合金及强化塑胶组成
- 可防水、防油
- 内藏触点座有双簧片设计，机械寿命长
- 具有较大的过行程
- 引动器种类多，方便使用

- Double circuit type of limit switch
- High mechanical strength, consists of intensive plastic and aluminum cast
- Water-proof and oil proof construction
- Built-in contact box has double-spring and long mechanical life
- Smooth operation with larger over travel distance
- Various actuators for different application

接点型式 Contact Form

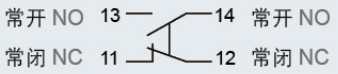

额定值 Ratings

额定电压 Rated Voltage	非电感性负载 Noninductive Load (A)				电感性负载 Inductive Load (A)			
	电阻性负载 Resistance Load		灯泡负载 Lamp Load		电感性负载 Inductive Load		马达负载 Motor Load	
	NC	NO	NC	NO	NC	NO	NC	NO
125VAC	5	5	1.5	0.7	3	3	2	1
250VAC	5	5	1	0.5	3	3	1.5	0.8
8VDC	5	5	3	3	5	4	3	3
14VDC	5	5	3	3	4	4	3	3
30VDC	5	5	3	3	4	4	3	3
125VDC	0.4	0.4						
250VDC	0.2	0.2						
突入电流 Inrush Current	N.C.:24A 以下、N.O.:12A 以下 N.C: below 24A, N.O: below 12A							

注 :1、电感性负载之功率因素在 0.4 以上 (AC)。时间常数在 7msec 以下 (DC)。
2、灯泡负载之突入电流为稳定状态电流之 10 倍。马达负载之突入电流为稳定状态电流之 6 倍。
3、带弹簧系列产品，操作体的使用范围为从弹簧的前端到弹簧全长的 1/3 以内。

NOTES: 1.Inductive load has a power factor of 0.4 min.(AC) and a time constant of 7 msec. max.(DC).
2.Lamp load has an inrush current of 10 times the steady-state current,while motor load has an inrush current of 6 times the steady-state current.
3.Product with spring, its usable range of operating part is within one third of the whole spring length from the front end of spring.

规格 Specifications

操作速度 Operation speed	5mm 至 0.5m/s 5mm-0.5m/s
动作频率 Operating frequency	电气 :30 次 / 分 Electical: 30 operations/min
接点电阻 Contact resistance	25mΩ 以下 (初期) 25mΩ max. (initial value)
绝缘电阻 Insulation resistance	100MΩ 以上 (在 500VDC 下) 100mΩ min. (below 500VDC)
电介强度 Dielectric strength	非连续端子间 1,000VAC, 50/60Hz 持续 1 分钟 1500VAC, 50/60 Hz for 1 minute between current-carrying and non -current-carrying metal parts
	载电流与无载电流零件间 1,500VAC, 50/60Hz 持续 1 分钟 1500VAC, 50/60 Hz for 1 minute between current-carrying and non -current-carrying metal parts
	端子和接地之间 1,500VAC, 50/60Hz 持续 1 分钟 1500VAC, 50/60 Hz for 1 minute between each terminal and ground
振动 Vibration	10 至 55Hz, 1.5mm 双振幅 10-55Hz,1.5mm double amplitude
冲击 Shock	机械耐久 :1,000m/Sec²(约 100G' S) 误动作耐久 :300m/Sec²(约 30G' S) Mechanical durable: 1, 000m/Sec² (about 100G'S) Malfunction: 300m/Sec² (about 30G'S)
周围温度 Ambient temperature	使用时 :-20~+70℃ (没有结冰) Using: -20~+70℃ (With no icing)
湿度 Humidity	95%RH 以下 <95% RH
电气寿命 Electrical life	500,000 次以上 500,000 operations above
保护构造 Protection level	IP66

注：导管连接器尺寸常规默认为 M18x1.5；导管连接器尺寸 PG11.5，型号加 (-P)，例：CSA-012-P。

NOTES: The default size of conduit connector is M18x1.5.Conduit connector size is PG11.5, with product model number plus (-P), example:CSA-012-P.

动作特性 Operating Characteristics

型号	Model	CSA	CSA-001	CSA-003	CSA-012	CSA-021 CSA-021M	CSA-041	CSA-031 CSA-031M	CSA-051	CSA-061	CSA-071	CSA-081
操作力	Operating force	OF (最大)(Max.)	800g	800g	800g	400g	400g	400g	400g	150g	150g	150g
回弹力	Release force	RF (最小)(Min.)	400g	400g	400g	100g	100g	100g	100g	50g	50g	50g
预行程	Pre-travel	PT (最大)(Max.)	1.8mm	1.8mm	1.8mm	20°	20°	20°	20°	30mm	30mm	30mm
触发位置	Tripping position	TP ± 10%	2.0mm	2.0mm	2.0mm	22.5°	22.5°	22.5°	22.5°	22.5°	22.5°	22.5°
行程移动分辨率	Movement differential	MD (最大)(Max.)	1.2mm	1.2mm	1.2mm	10°	10°	10°	10°	14°	14°	14°
过行程	Over travel	OT (最小)(Min.)	4.0mm	4.0mm	4.0mm	75°	75°	75°	75°	20mm	20mm	20mm
总行程	Total travel	TT (最小)(Min.)	5.8mm	5.8mm	5.8mm	95°	95°	95°	95°	50mm	50mm	50mm
摇臂转换分角度	Rotary indexing					22.5°	22.5°	22.5°	22.5°			

外观和尺寸 Appearance and Dimension

CSA-001

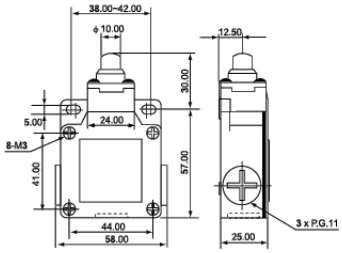

CSA-003

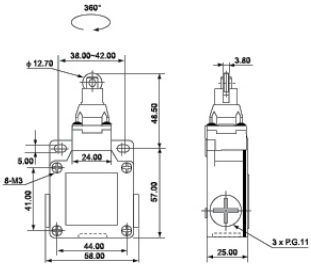

CSA-021

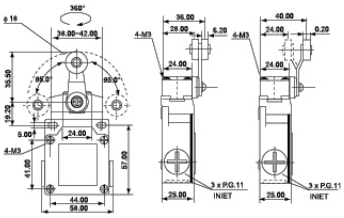

CSA-021M

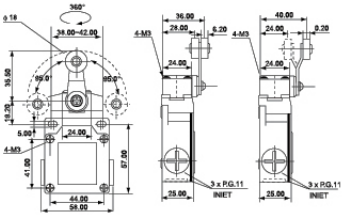

CSA-031

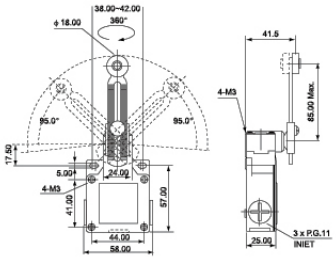

CSA-031M

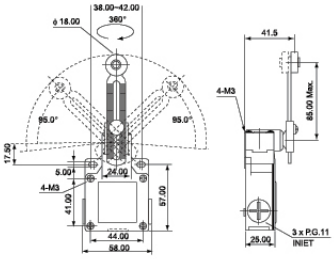

CSA-012

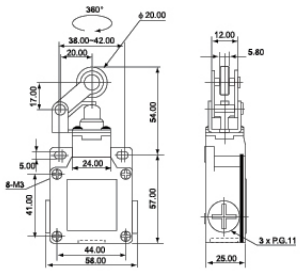

CSA-041

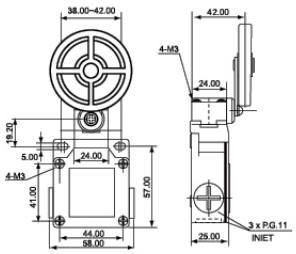

CSA-051

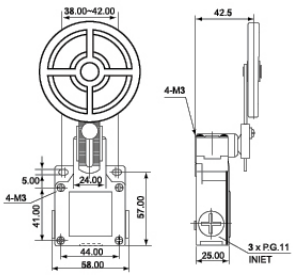

CSA-061

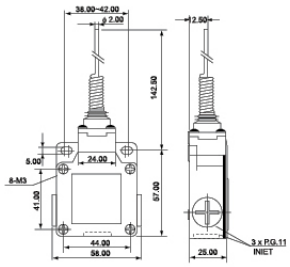

CSA-071

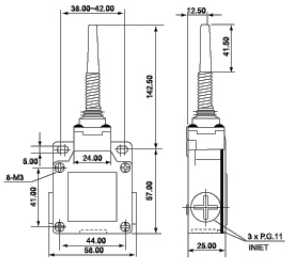

CSA-081

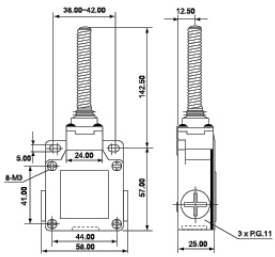

CWL 立式限位开关
Vertical Limit Switch

特点 Features

- 双回路型限动开关
- 具有高机械强度的一体铸造铝合金外壳
- 具耐油、防水和防压结构
- 引动器种类多，方便使用
- 内藏接点座有双簧片设计，机械寿命长

- Double-circuit type of limit switch
- High mechanical strength, mainly consists of aluminum cast
- Water-proof and oil-proof construction
- Various actuators for different applications
- Built-in contact box with double spring mechanism, longer mechanical life

接点型式 Contact Form

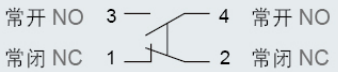

额定值 Ratings

额定电压 Rated Voltage	非电感性负载 Noninductive Load (A)				电感性负载 Inductive Load (A)			
	电阻性负载 Resistance Load		灯泡负载 Lamp Load		电感性负载 Inductive Load		马达负载 Motor Load	
	NC	NO	NC	NO	NC	NO	NC	NO
125VAC	10		3	1.5	10		5	2.0
250VAC	5		2	1	5		3	1.0
480VAC	3		1.5	0.8	3		1.5	0.8
600VAC	1		1	0.5	1.5		1	0.5
8VDC	10		6	3	10		6	
14VDC	10		6	3	10		6	
30VDC	6		4	3	6		4	
125VDC	0.8		0.2	0.2	0.8		0.2	
250VDC	0.4		0.1	0.1	0.4		0.1	

注：1、电感性负载：功率因素 =0.4；时间常数 =7msec。
2、灯泡负载之突入电流为稳定状态电流之 10 倍。马达负载之突入电流为稳定状态电流之 6 倍。
3、带弹簧系列产品，操作体的使用范围为从弹簧的前端到弹簧全长的 1/3 以内。

NOTES: 1.Inductive load has a power factor of 0.4 min.(AC) and a time constant of 7 msec. max.(DC).
2.Lamp load has an inrush current of 10 times the steady-state current,while motor load has an inrush current of 6 times the steady-state current.
3.Product with spring, its usable range of operating part is within one third of the whole spring length from the front end of spring.

规格 Specifications

操作速度 Operation speed	1mm 至 1m/s(CWLCA2 型) 1mm-1m/s
动作频率 Operating frequency	电气 :30 次 / 分 Electical: 30 operations/min
接点电阻 Contact resistance	25mΩ 以下 (初期) 25mΩ max. (initial value)
绝缘电阻 Insulation resistance	100MΩ 以上 (在 500VDC 下) 100mΩ min. (below 500VDC)
电介强度 Dielectric strength	非连续端子间 1,000VAC, 50/60Hz 持续 1 分钟 1500VAC, 50/60 Hz for 1 minute between current-carrying and non-current-carrying metal parts
	载电流与无载电流零件间 1,500VAC, 50/60Hz 持续 1 分钟 1500VAC, 50/60 Hz for 1 minute between current-carrying and non-current-carrying metal parts
	端子和接地之间 1,500VAC, 50/60Hz 持续 1 分钟 1500VAC, 50/60 Hz for 1 minute between each terminal and ground
振动 Vibration	10 至 55Hz, 1.5mm 双振幅 10-55Hz,1.5mm double amplitude
冲击 Shock	机械耐久 :1,000m/Sec^2(约 100G' S) 误动作耐久 :300m/Sec^2(约 30G' S) Mechanical durable: 1, 000m/Sec^2 (about 100G'S) Malfunction: 300m/Sec^2 (about 30G'S)
周围温度 Ambient temperature	使用时 :-20~+80℃ (没有结冰) Using: -20~+80℃ (With no icing)
湿度 Humidity	95%RH 以下 <95% RH
电气寿命 Electrical life	500,000 次以上 500,000 operations above
保护构造 Protection level	IP66

注：导管连接器尺寸常规默认为 M20x1.5，配电缆接头；导管连接器尺寸 PG13.5，型号加 (-P)，例：CWLCA2-2-P。

NOTES: The default size of conduit connector is M20x1.5, outfiting cable connector. Conduit connector size is PG13.5, with product model number plus (-P), example:CWLCA2-2-P.

动作特性 Operating Characteristics

型号	Model	CWL	CWLCA2-2	CWLD2	CWLNJ	CWLNJ-S2	CWLCA12-2-Q CWLCA12-2-QD	CWLCL	CWLCA32-41 CWLCA32-42	CWLD	CWLNJ-2	CWLNJ-30	CWLD1	CWLD3
操作力	Operating Force	OF(最大)(Max.)	1360g	2720g	150g	29g	1360g	142g	1200g	2720g	120g	80g	2720g	2720g
回弹力	Release Force	RF(最小)(Min.)	227g	910g	-	-	227g	28g	-	910g	-	-	910g	910g
预行程	Pre-Travel	PT(最大)(Max.)	20°	1.7mm	28mm	28mm	20°	20°	55O	1.7mm	28mm	28mm	1.7mm	1.7mm
过行程	Over Travel	OT(最小)(Min.)	30°	5.6mm	-	-	30°	30°	35O	6.4mm	-	-	5.6mm	5.6mm
行程移动分辨率	Movement Differential	MD(最大)(Max.)	12°	1mm	-	-	12°	12°	-	1mm	-	-	1mm	1mm
总行程动作力	Total Force	TF 最大 (Max.)	2720g	-	-	-	2720g	200g	-	-	-	-	2720g	2720g
总行程	Total Travel	TT 最小 (Min.)	50°	6.5±0.8mm	-	-	50°	50°	OP:90±10o	OP:34±2.8mm	-	-	6.5±0.8mm	9±0.8mm

外观和尺寸 Appearance and Dimension

CWLCA2-2

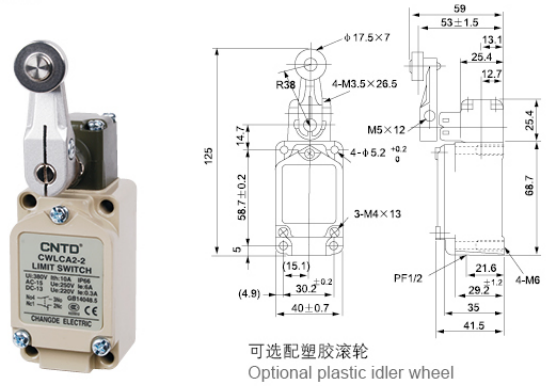

可选配塑胶滚轮
Optional plastic idler wheel

CWLCA12-2-Q

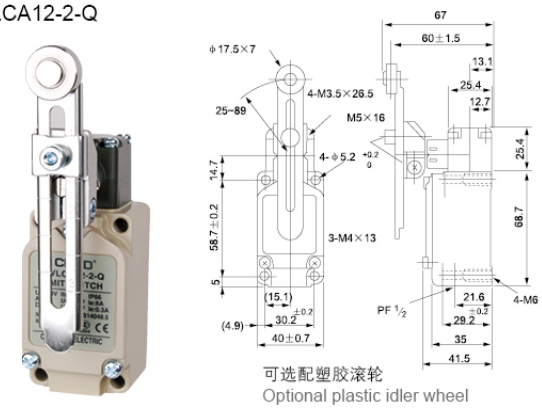

可选配塑胶滚轮
Optional plastic idler wheel

CWLCL

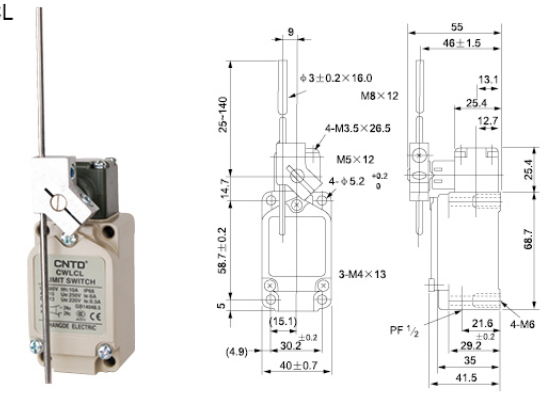

CWLD

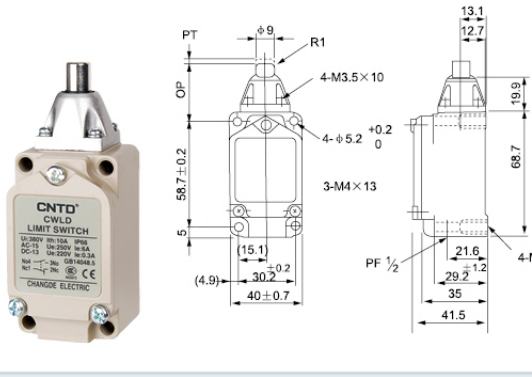

CWLD1

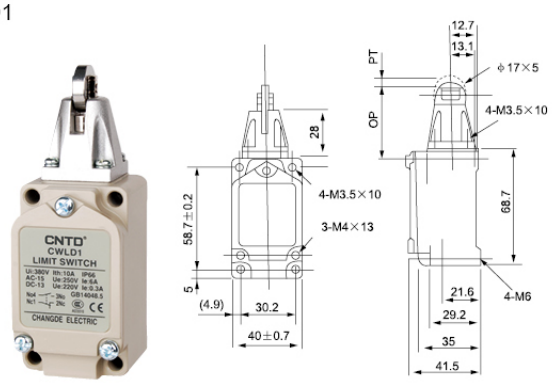

CWLD2

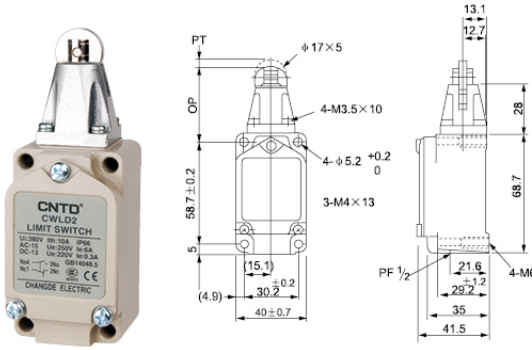

CWLD3

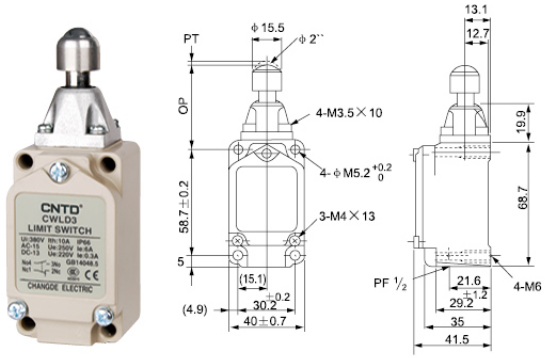

CWLCA12-2-QD

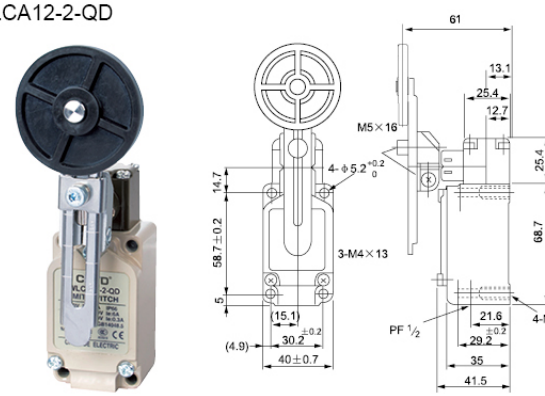

外观和尺寸 Appearance and Dimension

CWLNJ

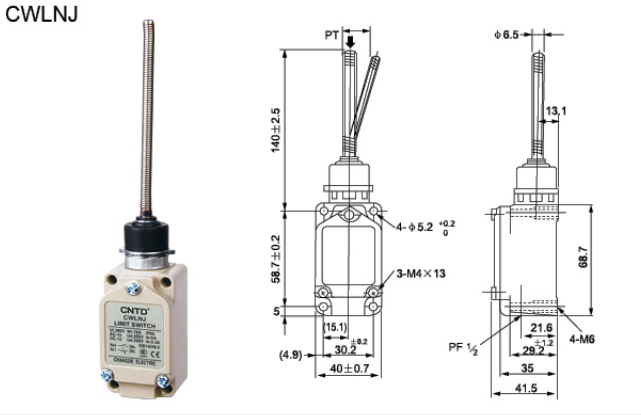

CWLNJ-30

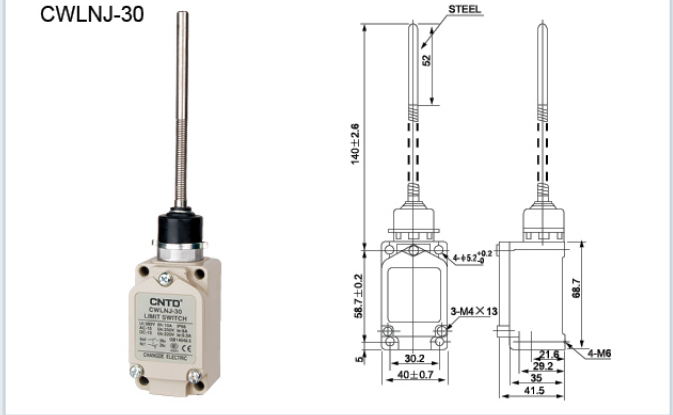

CWLNJ-2

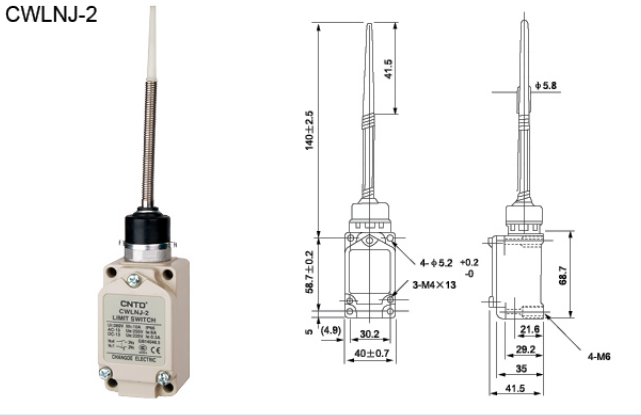

CWLNJ-S2

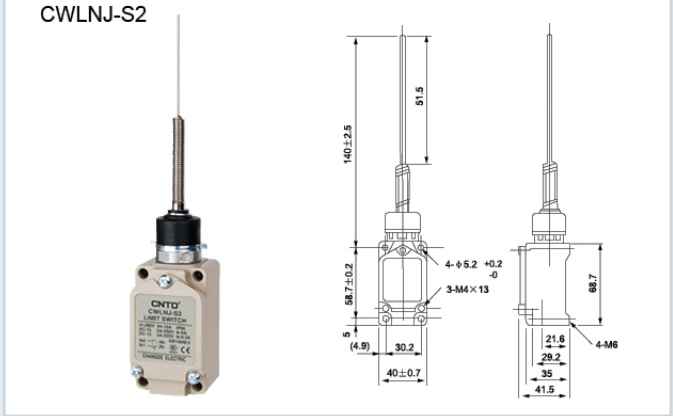

CWLCA32-41

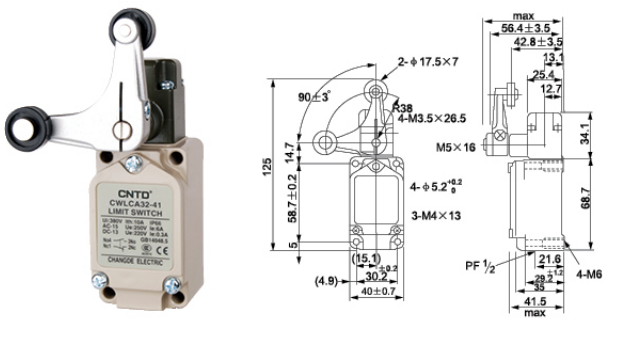

CWLCA32-41/M

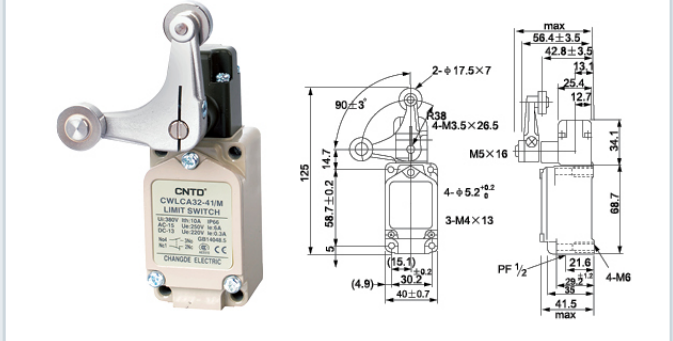

CWLCA32-42

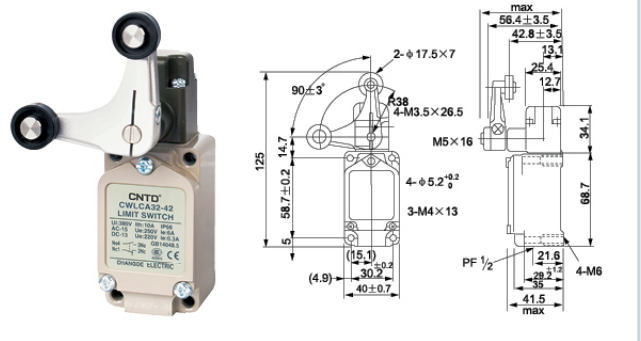

CWLCA32-42/M

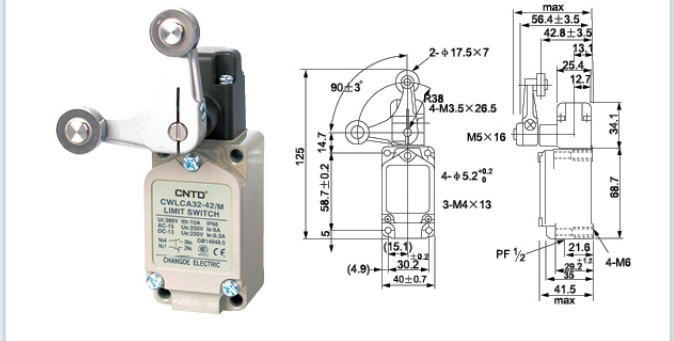

特点 Features

- 引动器种类多，方便使用
- 使配线更加简易的导管设计
- 金属外壳，高机械强度
- 内藏触点座有双簧片设计，机械寿命长

- Various actuators for different applications
- Conduit design for convenient cabling
- Metal shell with high mechanical strength
- Built-in contact box has double-spring and long mechanical life

接点型式 Contact Form

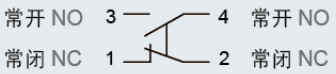

额定值 Ratings

额定电压 Rated Voltage	非电感性负载 Noninductive Load (A)				电感性负载 Inductive Load (A)			
	电阻性负载 Resistance Load		灯泡负载 Lamp Load		电感性负载 Inductive Load		马达负载 Motor Load	
	NC	NO	NC	NO	NC	NO	NC	NO
125VAC	5	5	1.5	0.7	3	3	2	1
250VAC	5	5	1	0.5	3	3	1.5	0.8
8VDC	5	5	3	3	5	4	3	3
14VDC	5	5	3	3	4	4	3	3
30VDC	5	5	3	3	4	4	3	3
125VDC	0.4	0.4						
250VDC	0.2	0.2						
突入电流 Inrush Current	N.C.:24A 以下、N.O.:12A 以下 N.C: below 24A, N.O: below 12A							

注 :1、电感性负载之功率因素在 0.4 以上 (AC)。时间常数在 7msec 以下 (DC)。
2、灯泡负载之突入电流为稳定状态电流之 10 倍。马达负载之突入电流为稳定状态电 流之 6 倍。
3、带弹簧系列产品，操作体的使用范围为从弹簧的前端到弹簧全长的 1/3 以内。

NOTES: 1.Inductive load has a power factor of 0.4 min.(AC) and a time constant of 7 msec. max.(DC).
2.Lamp load has an inrush current of 10 times the steady-state current,while motor load has an inrush current of 6 times the steady-state current.
3.Product with spring, its usable range of operating part is within one third of the whole spring length from the front end of spring.

规格 Specifications

操作速度 Operation speed	5mm 至 0.5m/s 5mm-0.5m/s
动作频率 Operating frequency	电气 :30 次 / 分 Electical: 30 operations/min
接点电阻 Contact resistance	25mΩ 以下 (初期) 25mΩ max. (initial value)
绝缘电阻 Insulation resistance	100MΩ 以上 (在 500VDC 下) 100mΩ min. (below 500VDC)
电介强度 Dielectric strength	非连续端子间 1,000VAC, 50/60Hz 持续 1 分钟 1000VAC, 50/60 Hz for 1 minute between terminals of the same polarity
	载电流与无载电流零件间 1,500VAC, 50/60Hz 持续 1 分钟 1500VAC, 50/60 Hz for 1 minute between current-carrying and non-current-carrying metal parts
	端子和接地之间 1,500VAC, 50/60Hz 持续 1 分钟 1500VAC, 50/60 Hz for 1 minute between each terminal and ground
振动 Vibration	10 至 55Hz, 1.5mm 双振幅 10-55Hz,1.5mm double amplitude
冲击 Shock	机械耐久 :1,000m/Sec²(约 100G' S) 误动作耐久 :300m/Sec²(约 30G' S) Mechanical durable: 1, 000m/Sec² (about 100G'S) Malfunction: 300m/Sec² (about 30G'S)
周围温度 Ambient temperature	使用时 :-20~+70℃ (没有结冰) Using: -20~+70℃ (With no icing)
湿度 Humidity	95%RH 以下 <95% RH
电气寿命 Electrical life	500,000 次以上 500,000 operations above
保护构造 Protection level	IP65

动作特性 Operating Characteristics

型号	Model	CHL	CHL-5000	CHL-5030	CHL-5050	CHL-5100	CHL-5200	CHL-5220	CHL-5300	CHL-5330	CHL-5381	CHL-5391
操作力	Operating force	OF (最大)(Max.)	750g	750g	750g	750g	900g	900g	150g	150g	150g	550g
回弹力	Release force	RF (最小)(Min.)	100g	100g	100g	200g	200g	200g	30g	30g	30g	100g
预行程	Pre-travel	PT (最大)(Max.)	20°	20°	20°	1.8mm	1.8mm	1.8mm	30mm	30mm	30mm	20°
触发位置	Tripping position	TP ± 10%	22.5°	22.5°	22.5°	2.0mm	2.0mm	2.0mm	22.5°	22.5°	22.5°	22.5°
行程移动分辨率	Movement differential	MD (最大)(Max.)	10°	10°	10°	1.2mm	1.2mm	1.2mm	14°	14°	14°	14°
过行程	Over travel	OT (最小)(Min.)	75°	75°	75°	4.0mm	4.0mm	4.0mm	20mm	20mm	20mm	75°
总行程	Total travel	TT (最小)(Min.)	95°	95°	95°	5.8mm	5.8mm	5.8mm	50mm	50mm	50mm	95°

外观和尺寸 Appearance and Dimension

CHL-5000

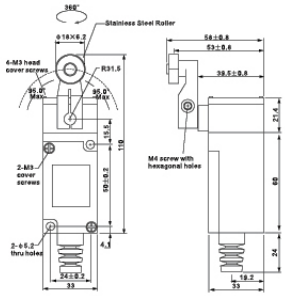

可选配尼龙滚轮Nylon Roller LSN-5000P

可选配金属滚轮
Optional metal idler wheel

CHL-5220

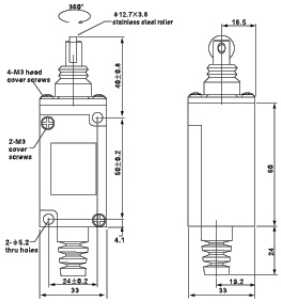

可转头方向成为 Direction of rotor CHL-5200

CHL-5030

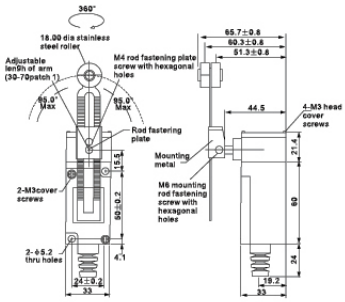

可选配金属滚轮
Optional metal idler wheel

CHL-5300

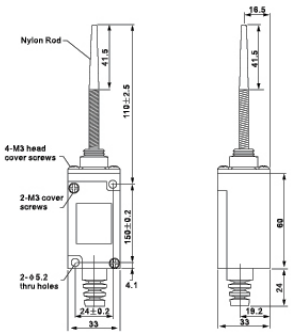

CHL-5050

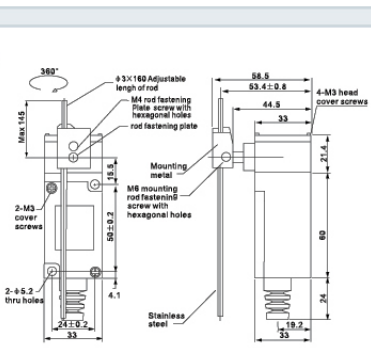

CHL-5330

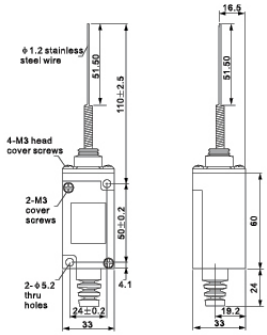

CHL-5100

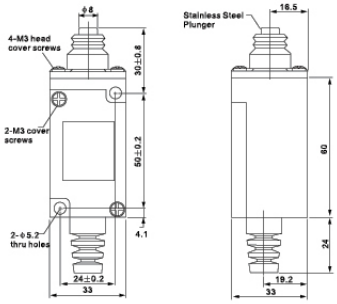

CHL-5381

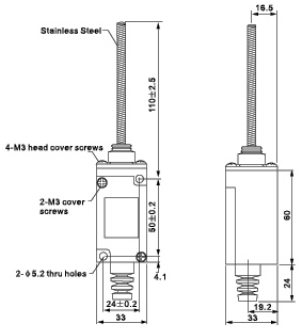

CHL-5200

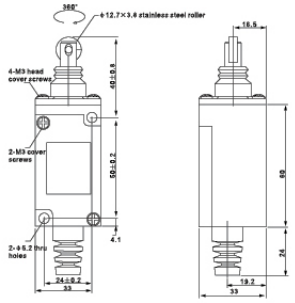

Direction of rotor CHL-5220

CHL-5391

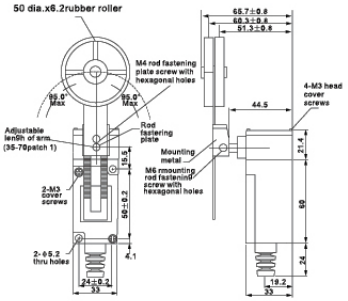

TZ-6 卧式限位开关 Horizontal Limit Switch

CNTD® 昌得电气

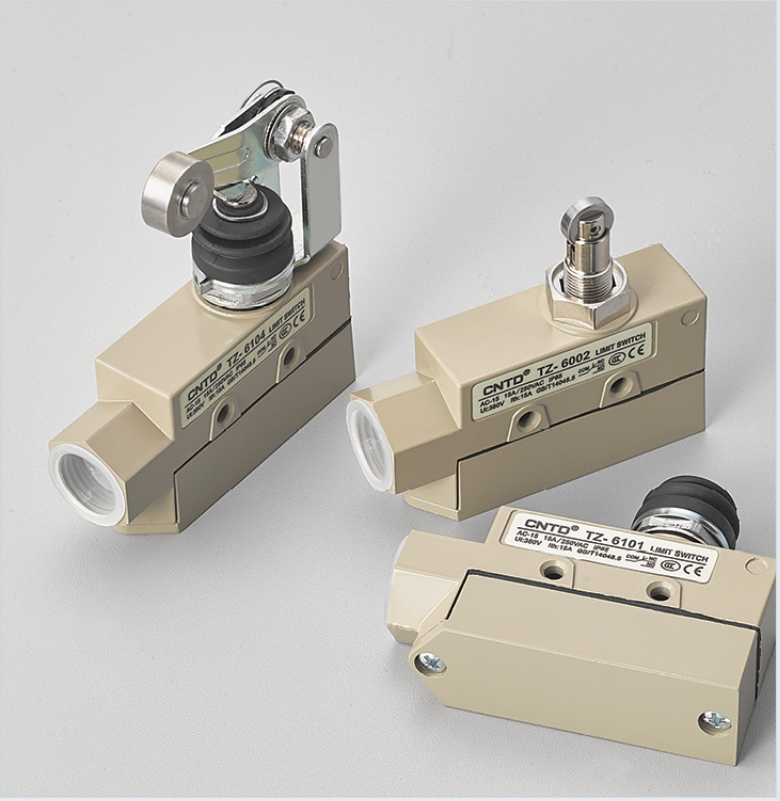

特点 Features

- 内藏 CM 卧式限位开关
- 具有高机械强度的一体铸造铝合金外壳
- 具耐油、防水和防压结构
- 额定值及特性同 CM 卧式限位开关
- 引动器种类多，方便使用

- Built-in CM horizontal limit switch
- High mechanical strength, mainly consists of aluminum cast
- Water-proof and oil-proof construction
- Same rated value and characteristic with CM horizontal limit switch
- Various actuators for different applications

接点型式 Contact Form

额定值 Ratings

额定电压 Rated Voltage	非电感性负载 Noninductive Load (A)				电感性负载 Inductive Load (A)			
	电阻性负载 Resistance Load		灯泡负载 Lamp Load		电感性负载 Inductive Load		马达负载 Motor Load	
	NC	NO	NC	NO	NC	NO	NC	NO
125VAC	5	5	1.5	0.7	3	3	2	1
250VAC	5	5	1	0.5	3	3	1.5	0.8
8VDC	5	5	3	3	5	4	3	3
14VDC	5	5	3	3	4	4	3	3
30VDC	5	5	3	3	4	4	3	3
125VDC	0.4	0.4						
250VDC	0.2	0.2						
突入电流 Inrush Current	N.C.:24A 以下、N.O.:12A 以下 N.C: below 24A, N.O: below 12A							

注 :1、电感性负载之功率因素在 0.4 以上 (AC)。时间常数在 7msec 以下 (DC)。
2、灯泡负载之突入电流为稳定状态电流之 10 倍。马达负载之突入电流为稳定状态电流之 6 倍。
3、带弹簧系列产品，操作体的使用范围为从弹簧的前端到弹簧全长的 1/3 以内。

NOTES: 1.Inductive load has a power factor of 0.4 min.(AC) and a time constant of 7 msec. max.(DC).
2.Lamp load has an inrush current of 10 times the steady-state current,while motor load has an inrush current of 6 times the steady-state current.
3.Product with spring, its usable range of operating part is within one third of the whole spring length from the front end of spring.

规格 Specifications

操作速度 Operation speed	5mm 至 0.5m/s 5mm-0.5m/s
动作频率 Operating frequency	电气 :20 次 / 分 Electical: 20 operations/min
接点电阻 Contact resistance	25mΩ 以下 (初期) 25mΩ max. (initial value)
绝缘电阻 Insulation resistance	100MΩ 以上 (在 500VDC 下) 100mΩ min. （below 500VDC）
电介强度 Dielectric strength	非连续端子间 1,000VAC, 50/60Hz 持续 1 分钟 1500VAC, 50/60 Hz for 1 minute between current-carrying and non-current-carrying metal parts
	载电流与无载电流零件间 1,500VAC, 50/60Hz 持续 1 分钟 1500VAC, 50/60 Hz for 1 minute between current-carrying and non-current-carrying metal parts
	端子和接地之间 1,500VAC, 50/60Hz 持续 1 分钟 1500VAC, 50/60 Hz for 1 minute between each terminal and ground
振动 Vibration	10 至 55Hz, 1.5mm 双振幅 10-55Hz,1.5mm double amplitude
冲击 Shock	机械耐久 :1,000m/Sec²(约 100G’ S) 误动作耐久 :300m/Sec²(约 30G’ S) Mechanical durable: 1, 000m/Sec² (about 100G’S) Malfunction: 300m/Sec² (about 30G’S)
周围温度 Ambient temperature	使用时 :-20~+80℃ (没有结冰) Using: -20~+80℃ （With no icing）
湿度 Humidity	95%RH 以下 <95% RH
电气寿命 Electrical life	500,000 次以上 500,000 operations above
保护构造 Protection level	IP66

注：导管连接器尺寸常规默认为 M20x1.5，配电缆接头；导管连接器尺寸 PG13.5，型号加 (-P)，例：TZ-6104-P。

NOTES: The default size of conduit connector is M20x1.5, outfiting cable connector. Conduit connector size is PG13.5, with product model number plus (-P), example:TZ-6104-P.

动作特性 Operating Characteristics

型号	Model	TZ-6	TZ-6001	TZ-6002	TZ-6003	TZ-6004	TZ-6043	TZ-6101	TZ-6102	TZ-6103	TZ-6104	TZ-6143
操作力	Operating force	OF(最大)(Max.)	250~350g	250~350g		570g	570g	800g	500g		640g	640g
回弹力	Release force	RF(最小)(Min.)	114g	114g		170g	170g	240g	100g		230g	230g
预行程	Pre-travel	PT(最大)(Max.)	0.4mm	0.5mm		4mm	4mm	2mm	1mm		5mm	5mm
行程移动分辨率	Movement differential	MD(最大)(Max.)	0.05mm	0.05mm		0.4mm	0.4mm	0.1mm	0.12mm		0.4mm	0.4mm
过行程	Over travel	OT(最小)(Min.)	5.5mm	3.6mm		6mm	6mm	5mm	3.5mm		6mm	6mm
动作位置	Operating Position	OP(mm.)	38.2 ± 0.8mm	49.7 ± 1mm				45.8 ± 0.8mm	49.7 ± 0.8mm			

外观和尺寸 Appearance and Dimension

TZ-6001

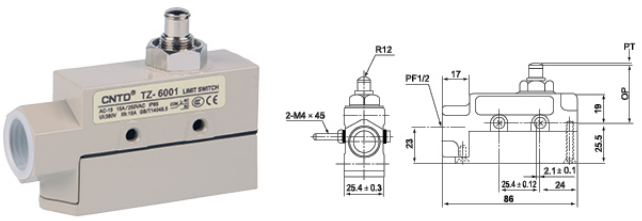

TZ-6101

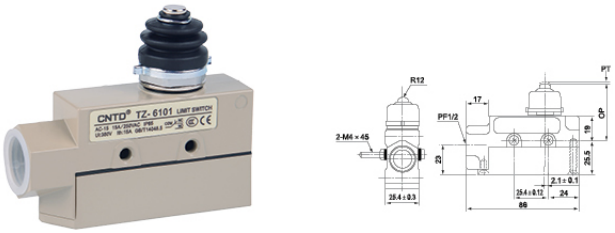

TZ-6002

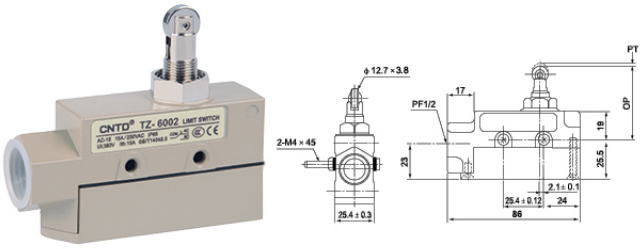

TZ-6003

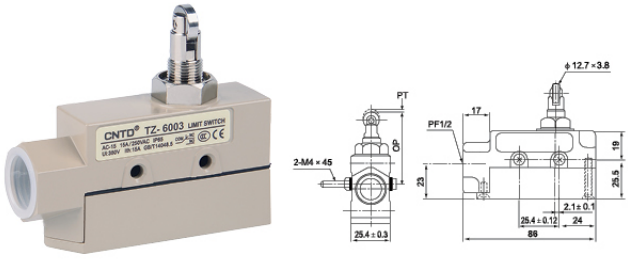

TZ-6102

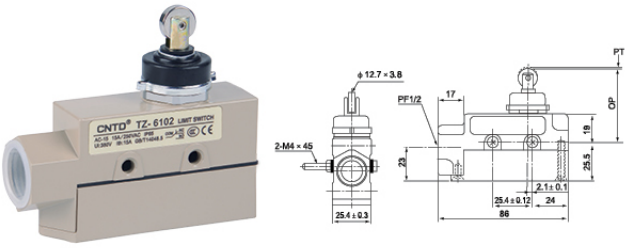

TZ-6103

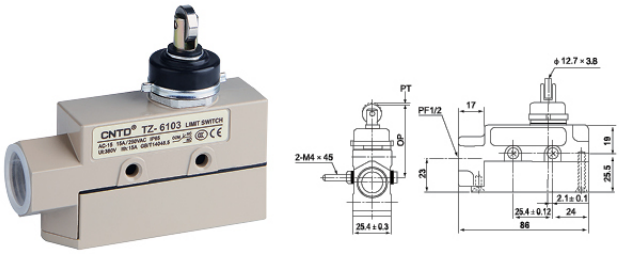

TZ-6004

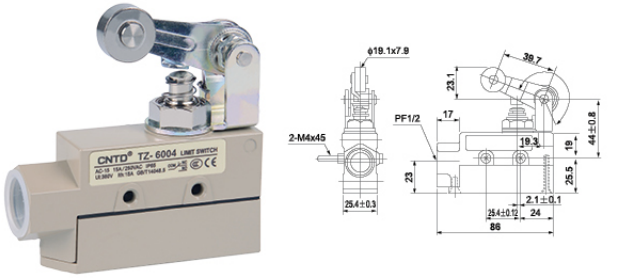

TZ-6104

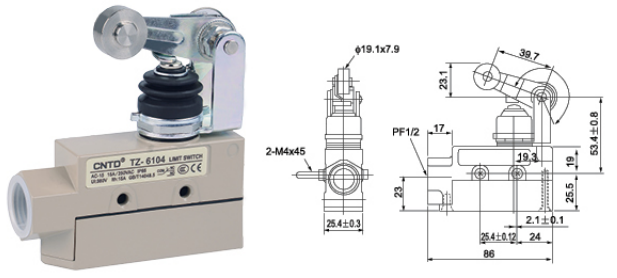

TZ-6143

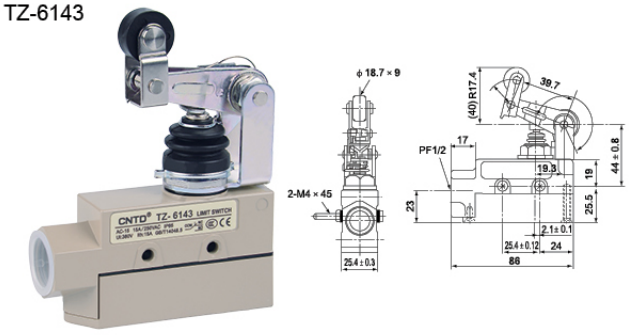

TZ-6106

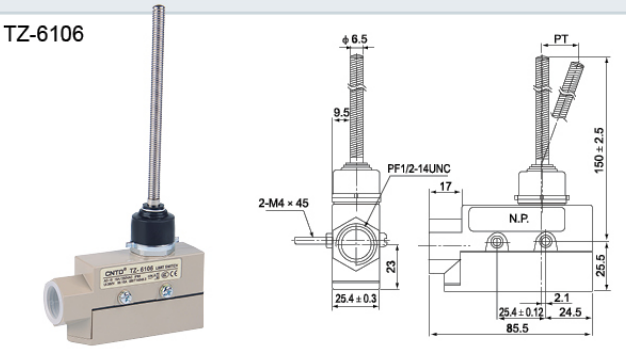

CZ-93 立式安全门限位开关
Vertical Interlock Safety Limit Switch

CNTD® 昌得电气

型号说明 Model Number Structure

CZ-93	C	PM	01
①	②	③	④

项次 Designation	代号 Model NO.	说明 Description
型号 Type	CZ-93	门式安全开关 Safety switch
接点型式 Type of contact blocks fitted	B	2B(2NC)
	C	1A1B(1NC/1NO)
导管 / 连接器尺寸 Conduit/connector size	PG	PG 13.5XP1.5(公制牙)
	PM	M20X1.5
钥匙型式 Actuating keys	None	无附钥匙 None
	01	平钥匙 Horizontal
	02	90° 钥匙 Vertical
	03	摆动钥匙 Adjustable

注：导管连接器尺寸常规默认为 M20x1.5。
NOTE: The default size of conduit connector is M20x1.5.

额定值 Ratings

额定电压 Rated Voltage	非电感性负载 Noninductive Load (A)				电感性负载 Inductive Load (A)			
	电阻性负载 Resistance Load		灯泡负载 Lamp Load		电感性负载 Inductive Load		马达负载 Motor Load	
	NC	NO	NC	NO	NC	NO	NC	NO
125 VAC	10		3	1.5	10		5	2.5
250 VAC	10		2	1	10		3	1.5
400 VAC	10		1.5	0.8	3		1.5	0.8
8 VDC	10		6	3	10		6	6
14 VDC	10		6	3	10		6	6
30 VDC	6		4	3	6		4	4
125 VDC	0.8		0.2	0.2	0.8		0.2	0.2
250 VDC	0.4		0.1	0.1	0.4		0.1	0.1

规格 Specifications

额定电流 Rating	3A 240VAC (A300)
操作速度 Operating speed	0.1m~0.5m/s
动作频率 Operating frequency	30 次 / 分 30 operations/min
接点电阻 Contact resistance	25mΩ 以下 (初期)25mΩ max. (initial).
绝缘电阻 Insulation resistance	100mΩ 以上 (在 500VDC 以下) 100mΩ min. (at 500VDC)
绝缘电压 Rated insulation voltage(UI)	400V
电介强度 Dielectric strength	AC2500V/Umip 4KV
振动 Vibration	10 至 55HZ，1.5mm 双振幅 10 to 55Hz, 1.5mm double amplitude
冲击 Shock	机械耐久 : 1000m/s² 以上 (约 100G 以上) 误动作耐久 : 300m/s² 以上 (约 30G 以上) Mechanical: Approx. 1000m/s² (Approx. 100G'S) Electrical: Approx. 300m/s² (Approx. 30G'S)
使用温度 Ambient temperature	-20~+70 ℃ (没有结冰)Using: -20~+70℃（With no icing）
使用湿度 Ambient Humidity	< 95% RH
电气寿命 Electrical life	15 万次以上 150,000 operations/min.
防水等级 Protection level	IP65 (IEC 规格 Standard)

使用注意事项 Cautions

钥匙与插入孔之中心上下左右位置应在 1mm 以内，以避免机构磨耗和破坏。
To prevent the wear and the space should be within 1mm between the key and middle of the insert hole.

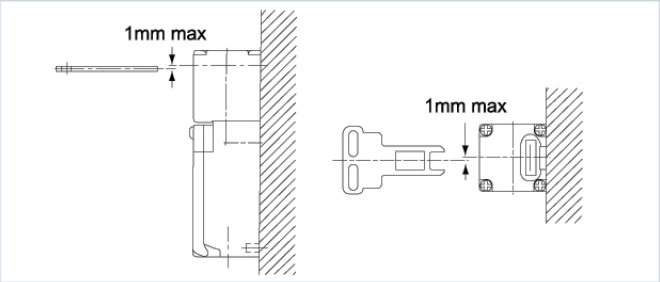

使用开关时，应于上方设置一挡板，以防止钥匙过于插入使机构损坏。而挡板与开关间 a 之距离应在 3mm 以下，以防止不动作。
When in use,there should put a plate on the top to prevent the key overinsert.To prevent nonmovement, the space between the plate and the switch should be under 3 mm.

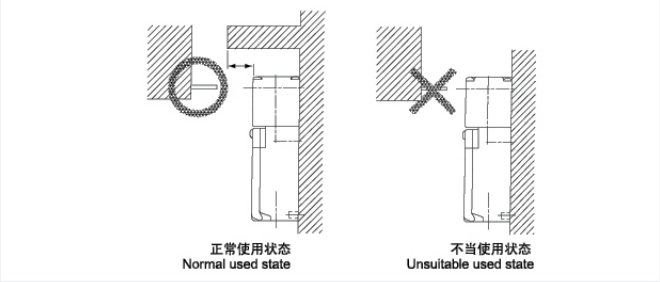

CZ-93 立式安全门限位开关
Vertical Interlock Safety Limit Switch

强制断开机构 Forced Disconnecting Mechanism

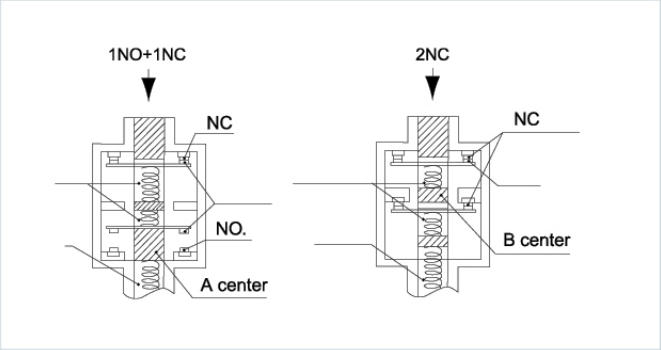

NC 接点的强制脱离机构，作用是当接点发生熔着时，下压钥匙机构中心，可将接点强制推开，使回路切断。(EN60947-5-1 强制脱离认定)。

When the contact block get fire, press on the middle of the key structure, the NC strict leaving structure can push the contact block a way cut off the movement.

动作特性 Operating Characteristics

操作插入力量	Key plug in force	最大	14.7N(1,500gf)
操作抽动力量	key pull out force	最大	29.42N(3,000gf)
动作距离	Pretravel		6 ± 3mm
总行程	Total travel		(28mm)
强制脱离力	Force required to have positive	最小	58.84N(6,000gf)
强制脱离距离	Positive opening travel	最小	10mm

外观和尺寸 Appearance and Dimension

CZ-93CPM

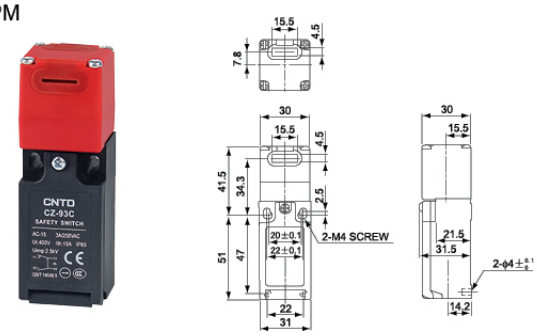

CZ-93CPM01

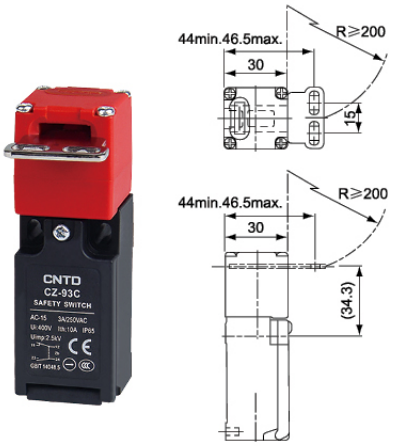

CZ-93BPM02

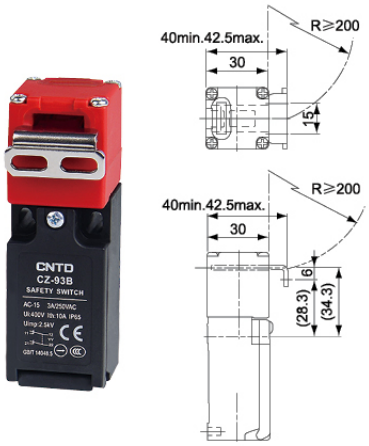

CZ-93CPM03

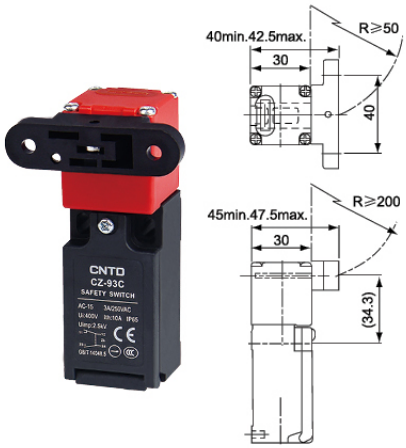

钥匙种类及尺寸 Key Dimension

CZ93-K1

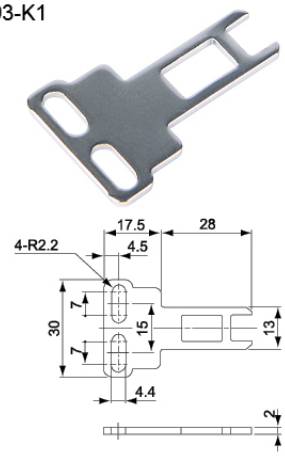

CZ93-K2

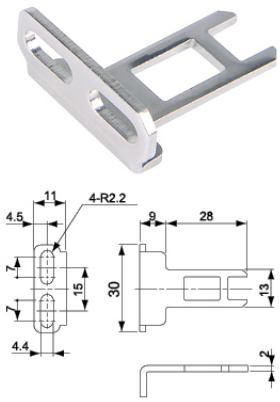

CZ93-K3

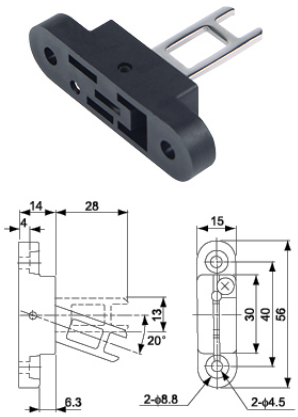

CZ-3 立式限位开关 Vertical Limit Switch

CNTD® 昌得电气

特点 Features

- 具有高机械强度的一体铸造铝合金外壳
- 具耐油，防水和防尘结构
- 引动器种类多，方便使用

- High mechanical strength, mainly consists of aluminum cast
- Water proof, oil proof and dust proof construction
- Various actuators for different applications

接点型式 Contact Form

额定值 Ratings

额定电压 Rated Voltage	非电感性负载 Noninductive Load (A)				电感性负载 Inductive Load (A)			
	电阻性负载 Resistance Load		灯泡负载 Lamp Load		电感性负载 Inductive Load		马达负载 Motor Load	
	NC	NO	NC	NO	NC	NO	NC	NO
125 VAC	5 (0.1)		1.5	0.7	3		2.5	1.3
250 VAC	3		1	0.5	2		1.5	0.8
8 VDC	5 (0.1)		2		5	4	3	
14 VDC	5 (0.1)		2		4	4	3	
30 VDC	4 (0.1)		2		3	3	3	
125 VDC	0.4		0.05		0.4	0.4	0.05	
250 VDC	0.2		0.03		0.2	0.2	0.03	

注：带弹簧系列产品，操作体的使用范围为从弹簧的前端到弹簧全长的 1/3 以内。

Note: Product with spring, its usable range of operating part is within one third of the whole spring length from the front end of spring.

规格 Specifications

额定值 Rating	5A 125V,3A 250VAC
操作速度 Operating speed	1mm~1m/s(摆杆型 Swing rod type)
	0.1mm~0.5m/s(柱塞型 Plunger type)
动作频率 Operating frequency	电气：30 次 / 分 Electrical:30 operations/min.
接点电阻 Contact resistance	25mΩ 以下 (初始值) 25mΩ max.(initial)
绝缘电阻 Inslation resistance	100mΩ 以上 (在 500VDC 以下) 100mΩ min.(at 500VDC)
电介强度 Dielectric strength	不连续端子间：1000VAC, 50/60Hz, 持续 1 分钟 1000VAC, 50/60 Hz for 1 minute between terminals of the same polarity
	端子和接地之间：1500VAC, 50/60Hz, 持续 1 分钟 1500VAC, 50/60 Hz for 1 minute between current-carrying and non-current-carrying metal parts
	端子和无载电流金属零件之间：1500VAC, 50/60Hz, 持续 1 分钟 1500VAC, 50/60 Hz for 1 minute between each terminal and ground
振动 Vibration Frequency	10-55Hz, 1.5mm 双振幅 10 to 55HZ,1.5mm double amplitude
冲击 Shock	机械耐久：1000mm/s² 以上 (约 100G 以上) 误动作耐久：500mm/s² 以上 (约 50G 以上) Mechanical:Approx.1000m/s² (Appprox.100G'S) Electrical:Approx.500m/s² (Approx.50G'S)
使用温度 Ambienttemperature	-20~+70 ℃ (没有结冰)Using: -20~+70℃（With no icing）
湿度 Humidity	< 95% RH
电气寿命 Electrical life	20 万次以上 200,000 operations/min.
重量 Weight	约 360g(电缆线长 3m) 约 540g(电缆线长 5m) Approx.360g(cable length 3m) Approx.540g(cable length 5m)
防水等级 Protection level	IP67

动作特性 Operating Characteristics

型号	Model	CZ-3	CZ-3101	CZ-3102	CZ-3103	CZ-3104 (3107/3108)	CZ-3110	CZ-3111	CZ-3112	CZ-3113	CZ-3169 (3166/3167/3168)
操作力	Operating Force	OF(最大)(Max.)	11.77N	11.77N	11.77N	5.69N	11.77N	17.65N	17.65N	17.65N	1.47N
回弹力	Release Force	RF(最小)(Min.)	4.41N	4.41N	4.41N	1.47N	4.41N	4.41N	4.41N	4.41N	-
预行程	Pre-Travel	PT(最大)(Max.)	1.8mm	1.8mm	1.8mm	25	1.8mm	1.8mm	1.8mm	1.8mm	15°
过行程	Over Travel	OT(最小)(Min.)	3mm	3mm	3mm	40	3mm	3mm	3mm	3mm	-
行程移动分辨率	Movement Differential	MD(最大)(Max.)	0.2mm	0.2mm	0.2mm	3	0.2mm	0.2mm	0.2mm	0.2mm	-
动作位置	Operating Position	OP(mm.)	15.7 ± 1mm	28.5 ± 1mm	28.5 ± 1mm	-	28.5 ± 1mm	24.9 ± 1mm	34.3 ± 1mm	34.3 ± 1mm	-

外观和尺寸 Appearance and Dimension

CZ-3101

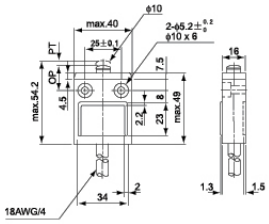

CZ-3102

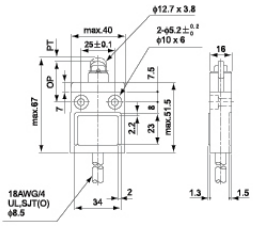

CZ-3103

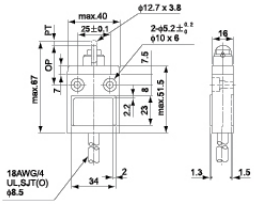

CZ-3104

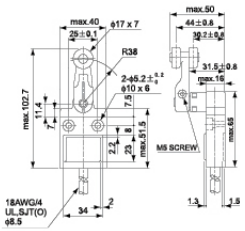

CZ-3107

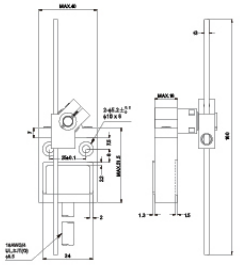

CZ-3108

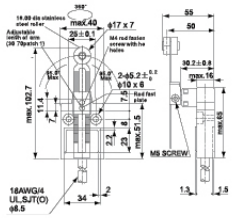

CZ-3110

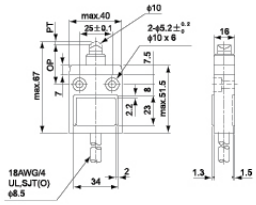

CZ-3111

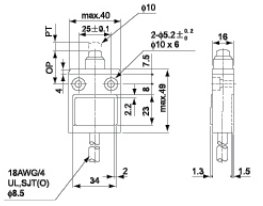

CZ-3112

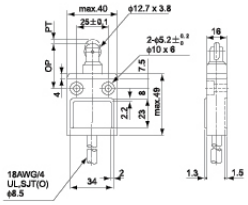

CZ-3113

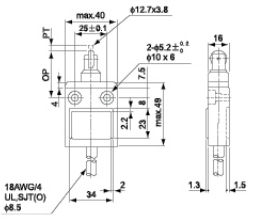

CZ-3166

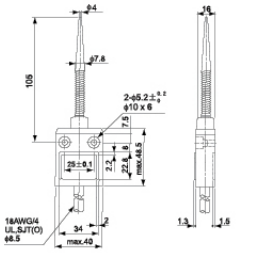

CZ-3167

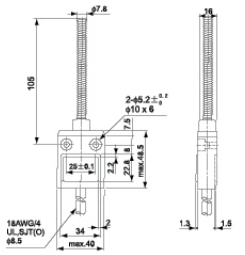

CZ-3168

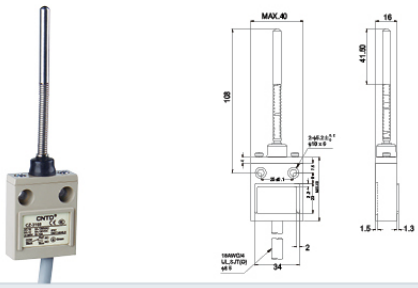

CZ-3169

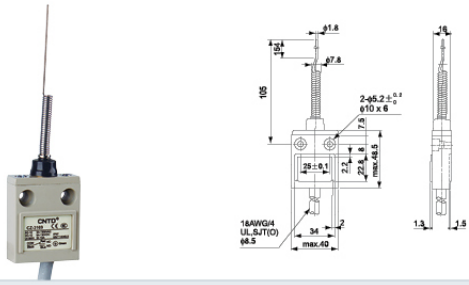

配线注意事项 Cabling Attention

配线需注意于离开关 5cm 处须加以固定，而电线之弯曲半径不得小于 R45cm，注意勿伤及电线绝缘体，以避免电线漏电等情形。
The switch bodies are filled with resin for sealing purposes. To avoid stressing the cable and switch body, fasten the switch at 5 cm or farther away from the switch body, should the wire be bent, the bending radius shall be at least 45mm.

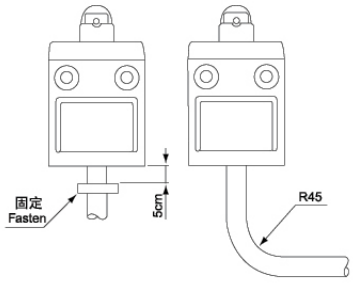

多连接使用的场合 Quantity Mounted Using Attention

需连接多组使用的场合时，最多可连接 6 组开关，连接时，开关表面之凹凸槽相互配合，另板厚 t 之尺寸应在 6mm 以上为适当。
A maximum of six switches may be mounted together as a switch bank. During the installation,the convex part of the switch back.The mounting panel shall be 6mm or thicker.

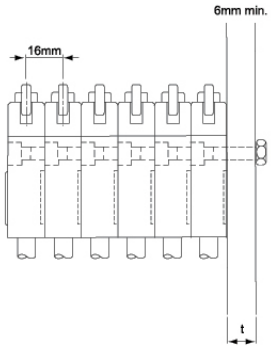

安装注意事项 Installation Attention

凸轮与定位杆等形状，频率及动作后移动等，将会影响使用寿命与精准度，因此建议定位杆之角度约 30°，而定位杆之表面粗糙度，以上，硬度 HV400-500，在设定开关之行程时，凹沟必须高于标准面之上为最适当之位置。
The service life and accuracy of switches will be effected by the shape of actuator operation frequency & over travel. So the angular of the fixing level should be about 30° , the surface finish of the fixing level should be over, the hardness is from HV400~500.When installing, the position of the concave part should be above the standard panel

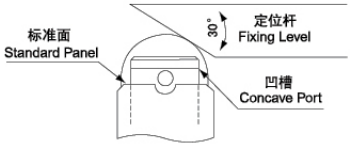

请依下表所示选择最适当之旋转扭力，施行锁紧作业，以避免伤害开关本体。
Recommended tightening torque according to the follwing form.

编号 Model	螺丝尺寸 Screw type	最适当之旋转扭力 Torque
1	M5 六角孔螺栓之固定螺丝 M5 fastening screws	43.4~52lb.in (50~60kgf.cm)
2	头部 M3.5 之安装螺丝 M3.5 installing screws	6.9~7.9lb.in (8~9kgf.cm)

接点型式 Contact Form

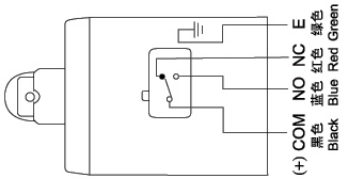

装配孔尺寸 Mounting Holes

安装板发生翘曲或凸起之状态，会造成安装上之不良，安装板请经筛选确认后，再予以使用。
Mount the switch body to a rigid mounting panel using two M5 screws.

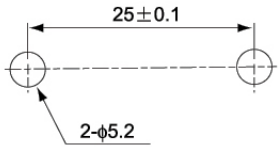

CLS 立式限位开关
Vertical Limit Switch

特点 Features

- 双回路型限动开关
- 塑料经济型限位开关
- 体积小，可防水、防油
- 内藏触点座有双簧片机构，机械寿命更长
- 具有较大的过行程
- 引动器种类多，方便使用

- Double circuit type of limit switch
- Economic plastic type of limit switch
- Small size, water-proof and oil-proof construction
- Built-in contact box has double-spring and long mechanical life
- Smooth operation with larger over travel distance
- Various actuators for different applications

接点型式 Contact Form

常开 NO 13 — 14 常开 NO

常闭 NC 11 — 12 常闭 NC

额定值 Ratings

额定电压 Rated Voltage	非电感性负载 Noninductive Load (A)				电感性负载 Inductive Load (A)			
	电阻性负载 Resistance Load		灯泡负载 Lamp Load		电感性负载 Inductive Load		马达负载 Motor Load	
	NC	NO	NC	NO	NC	NO	NC	NO
125VAC	5	5	1.5	0.7	3	3	2	1
250VAC	5	5	1	0.5	3	3	1.5	0.8
8VDC	5	5	3	3	5	4	3	3
14VDC	5	5	3	3	4	4	3	3
30VDC	5	5	3	3	4	4	3	3
125VDC	0.4	0.4						
250VDC	0.2	0.2						
突入电流 Inrush Current	N.C.:24A 以下、N.O.:12A 以下 N.C: below 24A, N.O: below 12A							

注 :1、电感性负载之功率因素在 0.4 以上 (AC)。时间常数在 7msec 以下 (DC)。
2、灯泡负载之突入电流为稳定状态电流之 10 倍。马达负载之突入电流为稳定状态电流之 6 倍。
3、带弹簧系列产品，操作体的使用范围为从弹簧的前端到弹簧全长的 1/3 以内。

NOTES: 1.Inductive load has a power factor of 0.4 min.(AC) and a time constant of 7 msec. max.(DC).
2.Lamp load has an inrush current of 10 times the steady-state current,while motor load has an inrush current of 6 times the steady-state current.
3.Product with spring, its usable range of operating part is within one third of the whole spring length from the front end of spring.

规格 Specifications

操作速度 Operation speed	5mm 至 0.5m/s 5mm-0.5m/s
动作频率 Operating frequency	电气 :30 次 / 分 Electical: 30 operations/min
接点电阻 Contact resistance	25mΩ 以下 (初期) 25mΩ max. (initial value)
绝缘电阻 Insulation resistance	100MΩ 以上 (在 500VDC 下) 100mΩ min. （below 500VDC）
电介强度 Dielectric strength	非连续端子间 1,000VAC, 50/60Hz 持续 1 分钟 1500VAC, 50/60 Hz for 1 minute between current-carrying and non -current-carrying metal parts
	载电流与无载电流零件间 1,500VAC, 50/60Hz 持续 1 分钟 1500VAC, 50/60 Hz for 1 minute between current-carrying and non -current-carrying metal parts
	端子和接地之间 1,500VAC, 50/60Hz 持续 1 分钟 1500VAC, 50/60 Hz for 1 minute between each terminal and ground
振动 Vibration	10 至 55Hz, 1.5mm 双振幅 10-55Hz,1.5mm double amplitude
冲击 Shock	机械耐久 :1,000m/Sec^2(约 100G’ S) 误动作耐久 :300m/Sec^2(约 30G’ S) Mechanical durable: 1, 000m/Sec^2 (about 100G'S) Malfunction: 300m/Sec^2 (about 30G'S)
周围温度 Ambient temperature	使用时 :-20~+70℃ (没有结冰) Using: -20~+70℃ （With no icing）
湿度 Humidity	95%RH 以下 <95% RH
电气寿命 Electrical life	500,000 次以上 500,000 operations above
保护构造 Protection level	IP66

注：导管连接器尺寸常规默认为 M20x1.5；导管连接器尺寸 PG13.5，型号加 (-P)，例：CLS-103-P。

NOTES: The default size of conduit connector is M20x1.5, outfiting cable connector. Conduit connector size is PG13.5, with product model number plus (-P), example:CLS-103-P.

动作特性 Operating Characteristics

型号	Model	CLS	101 301	102/103 302/303	111 311	121/121M 321/321M	127 327	131/131M 331/331M	161 361	171 371	181 381	191 391
操作力	Operating force	OF (最大)(Max.)	700g	700g	700g	500g	700g	500g	100g	100g	100g	500g
回弹力	Release force	RF (最小)(Min.)	200g	200g	200g	100g	200g	100g	40g	40g	40g	100g
预行程	Pre-travel	PT (最大)(Max.)	1.8mm	1.8mm	1.8mm	20°	1.8mm	20°	30mm	30mm	30mm	20°
触发位置	Tripping position	TP ± 10%	2.0mm	2.0mm	2.0mm	22.5°	2.0mm	22.5°	22.5°	22.5°	22.5°	22.5°
行程移动分辨率	Movement differential	MD(最大)(Max.)	1.2mm	1.2mm	1.2mm	10°	1.2mm	10°	14°	14°	14°	10°
过行程	Over travel	OT (最小)(Min.)	4.0mm	4.0mm	4.0mm	75°	4.0mm	75°	20mm	20mm	20mm	75°
总行程	Total travel	TT (最小)(Min.)	5.8mm	5.8mm	5.8mm	95°	5.8mm	95°	50mm	50mm	50mm	95°
摇臂转动分角度	Rotary indexing					22.5°		22.5°				22.5°

CNTD® 昌得电气

外观和尺寸 Appearance and Dimension

CLS-101

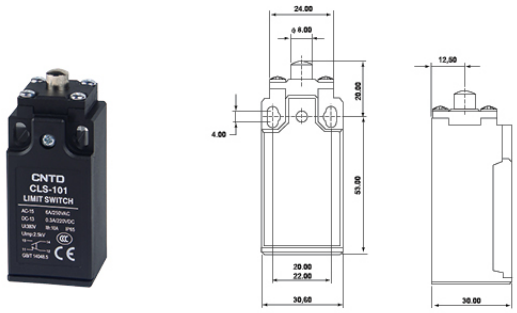

CLS-102

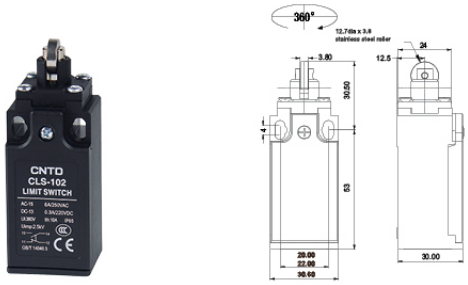

CLS-103

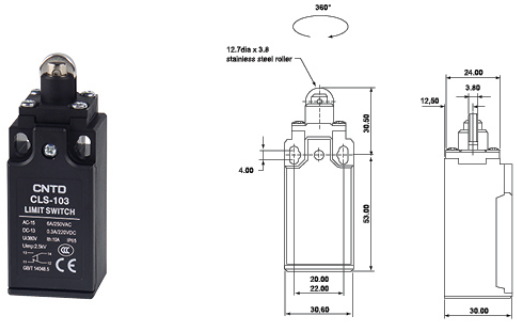

CLS-111

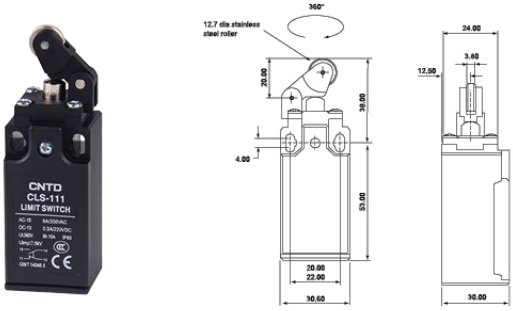

CLS-112

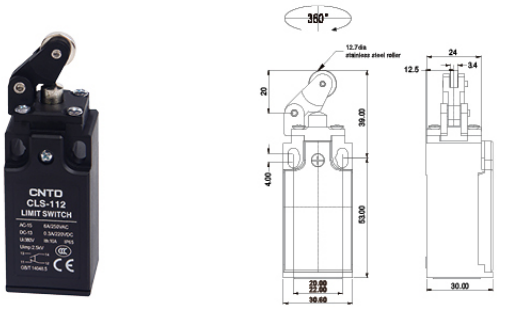

CLS-127

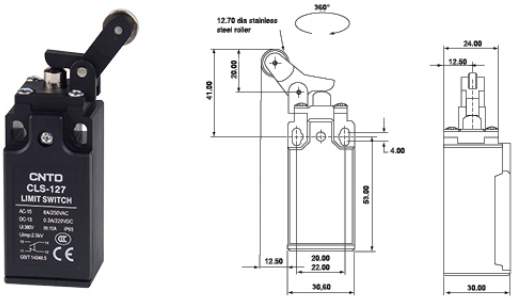

CLS-121

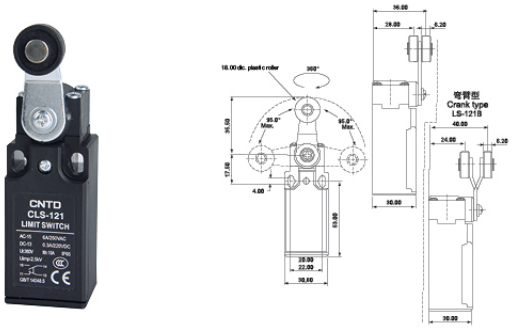

CLS-121M

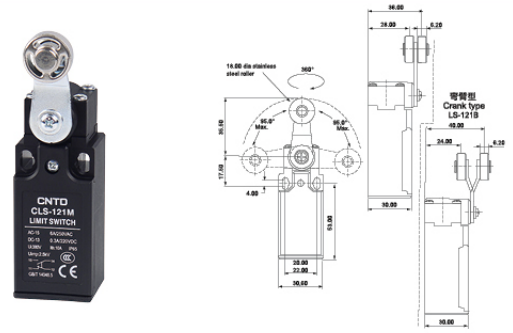

CLS-131

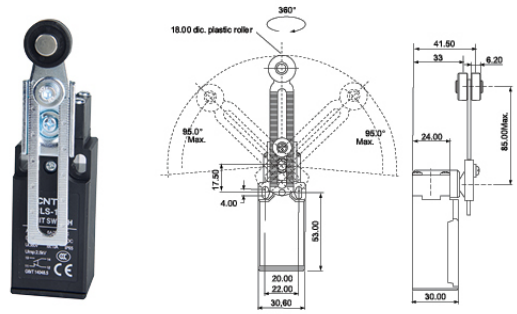

CLS-131M

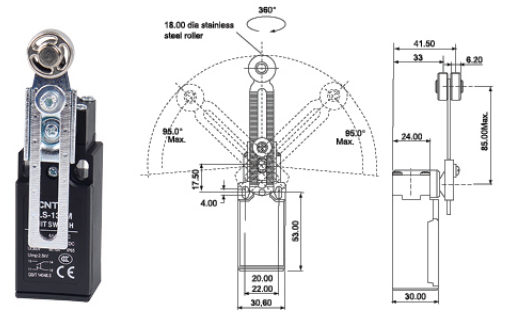

CLS-1 立式限位开关 Vertical Limit Switch

外观和尺寸 Appearance and Dimension

CLS-161

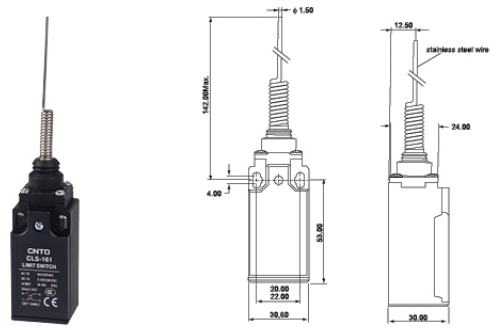

CLS-171

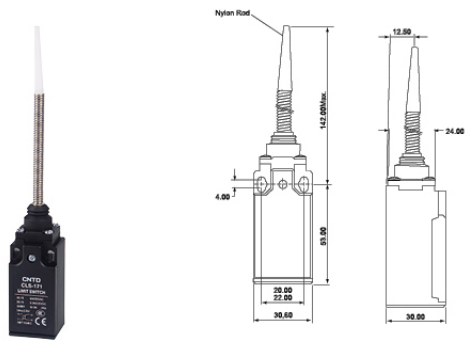

CLS-181

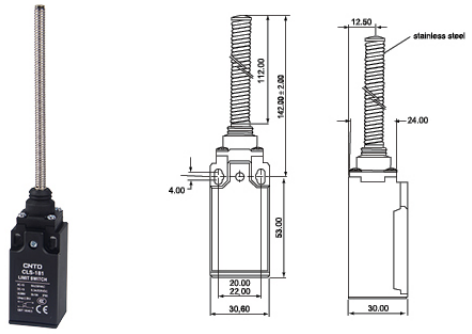

CLS-191

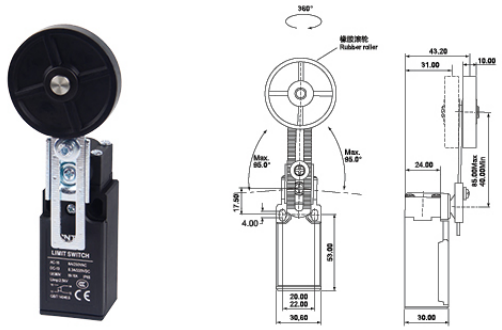

CLS-3 立式限位开关 Vertical Limit Switch

外观和尺寸 Appearance and Dimension

CLS-301

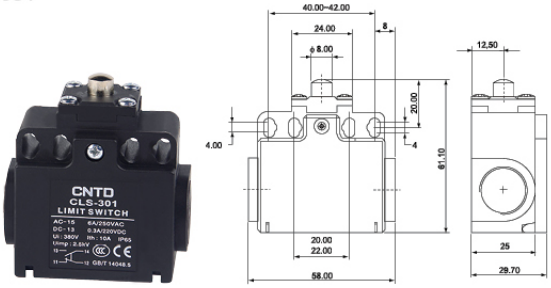

CLS-302

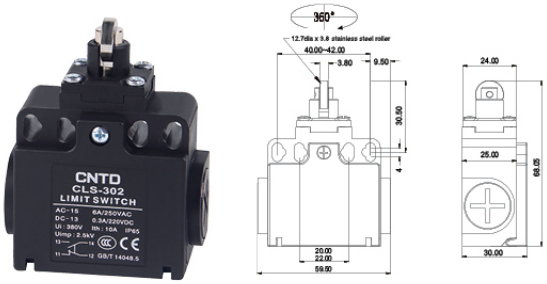

CLS-303

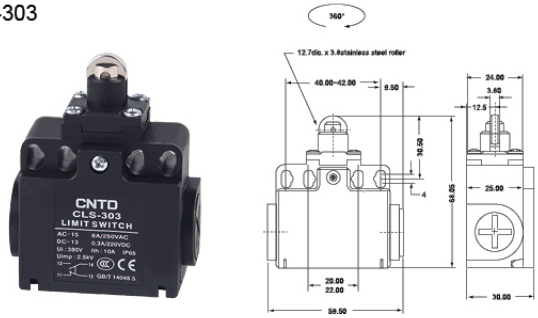

CLS-311

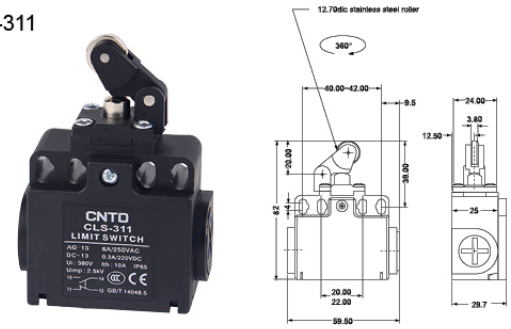

外观和尺寸 Appearance and Dimension

CLS-312

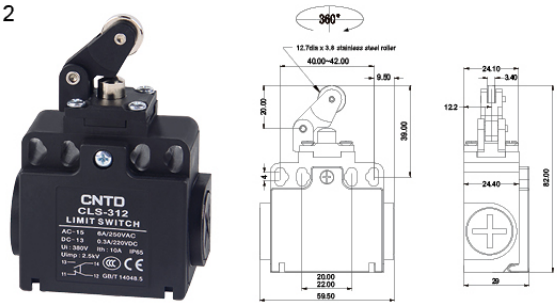

CLS-327

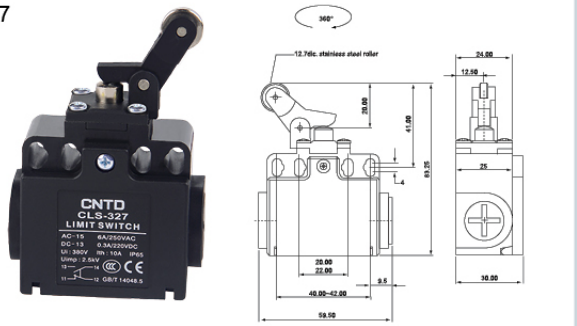

CLS-321

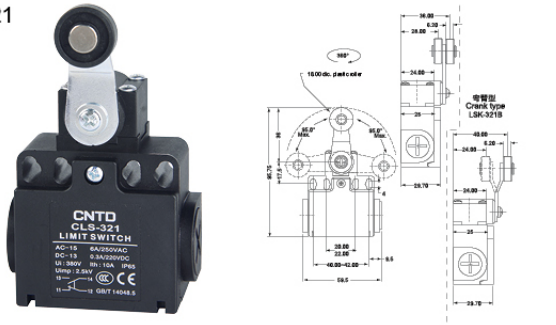

CLS-321M

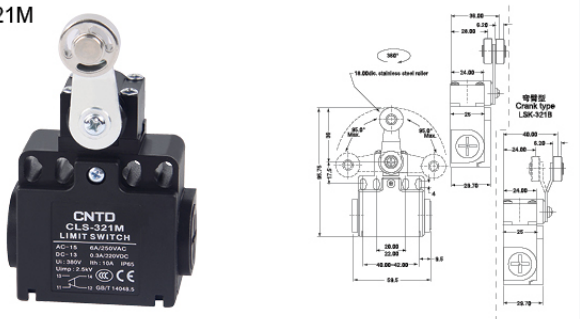

CLS-331

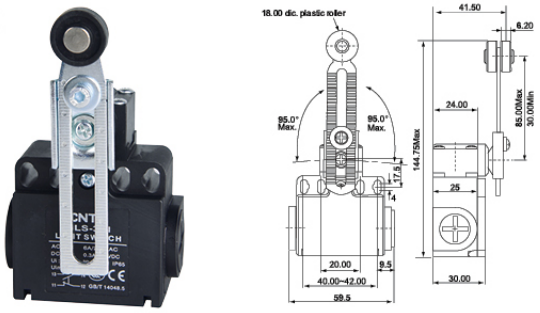

CLS-331M

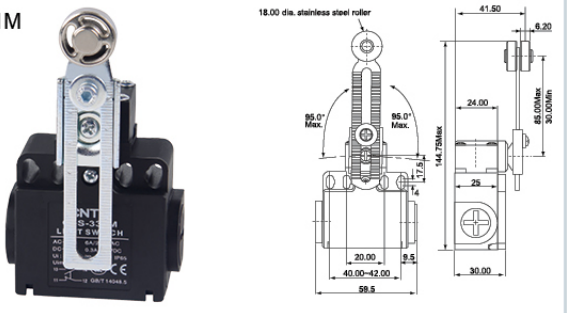

CLS-361

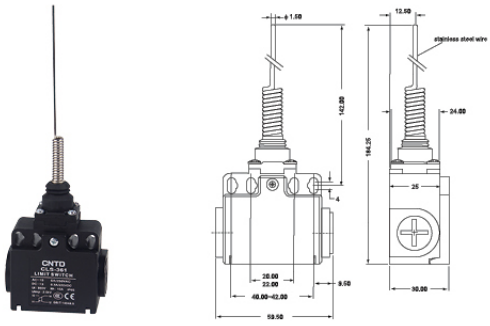

CLS-371

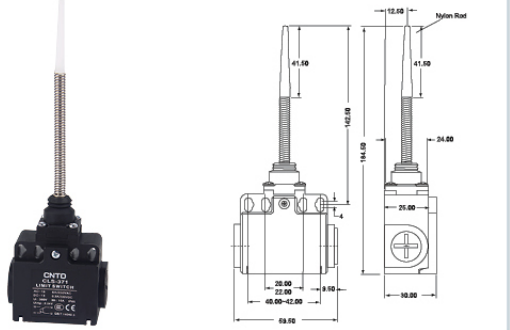

CLS-381

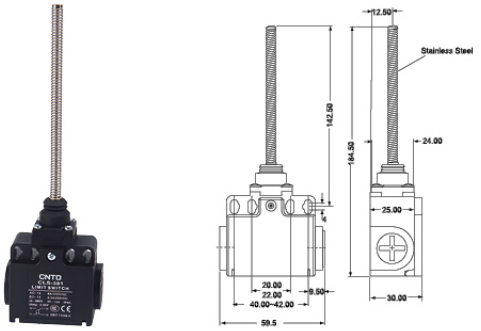

CLS-391

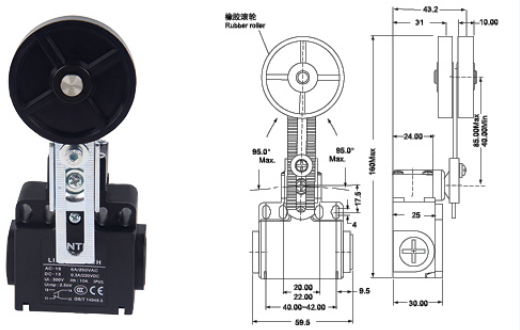

C4N 立式安全限位开关
Vertical Safety Limit Switch

特点 Features

- 强制断开动作装置（仅 NC 接点），可以在发生像接点熔断等故障时断开接点
- 强化顶部密封结构，以提高密封性能
- 内藏接点座具有速动型：1NC/1NO、2NC；慢动型：1NC/1NO、2NC

- Forced open action device(NC contacts only), to disconnect the contact when the contact has fusing and other failures
- Strengthened top seal structure improves the sealing performance
- Built-in contact holder has fast-action type: 1NC/1NO; Slow-action: 1NC /1NO and 2NC

型号说明 Model Number Structure

C4N – [4] [1] [2][2]

① ② ③

项目 Item	代号 Code	说明 Description
① 导管 / 连接器尺寸 Conduit / connector size	1	Pg13.5 (1 导管型) Pg13.5 (1 conduit type)
	4	M20 (1 导管型) M20 (1 conduit type)
	5	Pg13.5 (2 导管型) Pg13.5 (2 conduits type)
	8	M20 (2 导管型) M20 (2 conduits type)
② 内藏开关 Built-in switch	1	1NC/1NO（速动型）1NC/1NO (quick-action type)
	2	2NC（速动型）2NC (quick-action type)
	A	1NC/1NO（慢动型）1NC/1NO (slow-action type)
	B	2NC（慢动型）2NC (slow-action type)
③头部及传动杆 Head and driving rod	20	滚珠摆杆型（树脂摆杆，树脂滚珠） Roller lever (resin lever, resin ball)
	22	滚珠摆杆型（金属摆杆，树脂滚珠） Roller lever (metal lever, resin ball)
	25	滚珠摆杆型（金属摆杆，金属滚珠） Roller lever (metal lever, metal resin ball)
	2G	可调滚珠摆杆，Form Lock（金属摆杆，树脂滚珠） Adjustable roller lever, Form Lock (metal lever, resin ball)
	2H	可调滚珠摆杆，Form Lock（金属摆杆，橡胶滚珠） Adjustable roller lever, Form Lock (metal lever, rubber ball)
	2M	可调滚珠摆杆，Form Lock（金属摆杆，金属滚珠） Adjustable roller lever, Form Lock (metal lever, metal resin ball)
	31	顶部柱塞型 Top plunger type
	32	顶部柱塞滚珠型 Top plunger ball type
	62	单侧悬臂滚珠型（水平） Unilateral cantilever ball type (horizontal)
	72	单侧悬臂滚珠型（垂直） Unilateral cantilever ball type (vertical)
	80	触须型 Whisker type
	87	塑料棒型 Plastic stick type

注：导管连接器尺寸常规默认为 M20x1.5。
NOTE: The default size of conduit connector is M20x1.5.

规格 Specifications

保护等级 Protection level		IP66
寿命 Life	电气 Electrical	50 万次以上 (AC250V 3A、电阻负载) More than 500,000 times (AC250V 3A, resistive load) 30 万次以上 (AC250V 10A、电阻负载) More than 300,000 times (AC250V 10A, resistive load)
操作速度 Operating speed		1mm-0.5m/s(C4N-4120 型)
动作频率 Operating frequency		电气：30 次 / 分 Electrical: 30 operations/min
接触电阻 Contact resistance		25mΩ 以下 25 mΩ or less
最小使用负载 Minimum working load		DC5V 1mA 电阻负载 (N 标准参考值) 1mA resistive load below DC5V (N standard reference value)
额定绝缘电压 (UI) Rated insulation voltage (Ui)		300V
防触电保护等级 Electric shock protection grade		Class Ⅱ（双重绝缘） Class II (double insulated)
污染度（使用环境） Pollution degree (Using conditions)		污染度 3(EN60947-5-1) Pollution degree 3 (EN60947-5-1)
耐电压 Withstand voltage (EN60947-5-1)		同极端子间：2.5kV Between homopolar terminals: 2.5kV
		异极端子间：4kV Between heteropolar terminals: 2.5kV
		各端子和非充电金属部间：6kV Between terminals and uncharged metal parts: 6kV
绝缘电阻 Insulation resistance		100MΩ 以上 Above 100MΩ
接点间隙 Contact gap		最小 2 × 0.5mm 速动型 最小 2 × 2mm 慢动型 Minimum 2 × 0.5mm quick-action type, Minimum 2 × 2mm slow-action type
振动 Vibration	误动作 Malfunction	10 ~ 55Hz 0.75mm 单振幅 10 ~ 55Hz 0.75mm single amplitude
冲击 Impact	耐久 Duration	1,000m/s²
	误动作 Malfunction	300m/s²
环境温度 Ambient temperature		使用时：-20~+70℃（没有结冰） Using: -20~+70℃（With no icing）
环境湿度 Ambient humidity		95%RH 以下 Less than 95% RH
质量 Weight		约 82g(C4N-1120) About 82g (D4N-1120) 约 99g(C4N-5120) About 99g (D4N-5120)

注 1. 上述值为初始值。
注 2. 一旦接点连接标准负载后，就不可用于连接更小容量的负载。否则可能导致接点表面粗糙，从而失去接触可靠性。
*1. 保护等级是根据 (EN60947-5-1) 规格的测试法得出的。使用前务必在实际使用的环境、条件下确认其密封性。 开关盒本体具有防尘、防油构造，但应尽可能保持头部在没有碎屑粉尘、油污、化学品的场所进行使用。否则可能导致过早磨损、损坏或故障。
*2. 耐久性的条件是使用环境温度 5℃ ~ 35℃、使用环境湿度 40% ~ 70% RH。其他详细条件请另行查询。
*3. 使用环境温度为 35℃以上时，禁止使用 2 回路以上的 3A AC250V 负载。
*4. 这个值会因为开关频率、环境条件、可靠性等级等因素的影响而不同。请事先在实际负载上进行确认。

Note 1. The above values are initial values.
Note 2. Once the contact is connected to a standard load, it can not be used to connect a smaller load. If so, the contact may result in rough surface, thus losing contact reliability.
*1. The protection level is gotten based on test method of (EN60947-5-1). Please make sure its sealing under actual environmental conditions before use. The switch box has dust and oil resistance structure, but it should be used in places without dust, oil and chemicals. Otherwise it may lead to premature wear, damage or malfunction.
*2. The durability is for ambient temperature of 5℃ ~ 35℃ and humidity of 40% to 70% RH. For additional details, please contact us.
*3. When the ambient temperature is above 35℃, more than 2 circuits 3A 250VAC loads are prohibited.
*4. The values will vary with different switching frequency, environmental conditions, reliability level and other factors. Please confirm on the actual load in advance.

强制断开构造 Forced Disconnecting Mechansim

■ 1NC、1NO 接点 (速动型)
1NC and 1NO contacts (quick-action type)

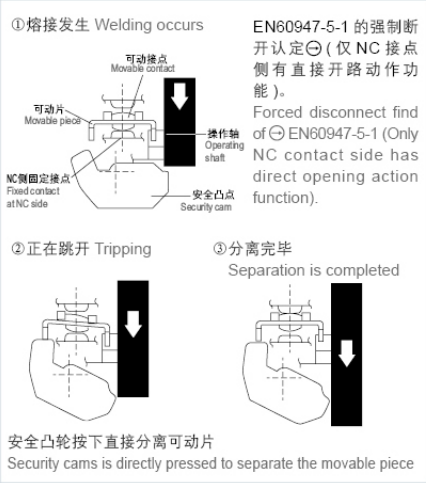

EN60947-5-1 的强制断开认定⊖(仅 NC 接点侧有直接开路动作功能)。
Forced disconnect find of ⊖ EN60947-5-1 (Only NC contact side has direct opening action function).

■ 1NC、1NO 接点 (慢动型)
1NC and 1NO contacts (slow-action type)

EN60947-5-1 的强制断开认定⊖(仅NC接点侧有强制断开功能)。熔接发生时，通过柱塞的压下 NC 接点分离，回路切断。
Forced disconnect find ⊖ of EN60947-5-1 (Only NC contact side has forced disconnect function). When welding occurs, NC contact is separated by pressing the plunger and the loop is cut off.

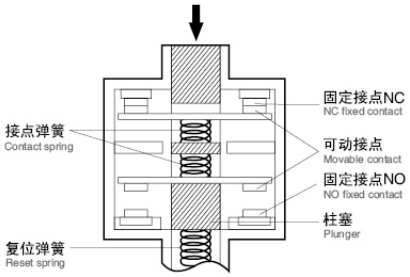

■ 2NC 接点 (慢动型)
2NC contacts (slow-action type)

EN60947-5-1 的强制断开认定⊖(仅NC接点侧有强制断开功能)。
Forced disconnect find ⊖ of EN60947-5-1 (Only NC contact side has forced disconnect function).

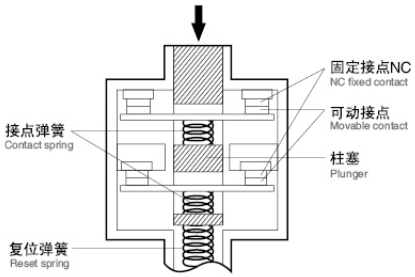

接点形式 Contact Form

型号 Model	接点 Contact	接点形式 Contact form	动作模式 Operation mode	说明 Explanation
C4N- □ 1 □	1NC/1NO (速动型) 1NC/1NO (Quick-action type)	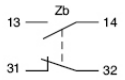	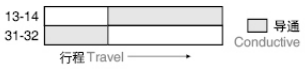	仅 NC 接点 (31-32) 具有强制断开功能 (⊖)。 Only NC contact (31-32) has forced disconnect function (⊖) 接点 (13-14) 和 (31-32) 可作异极使用。 Contacts (13-14) and (31-32) can be used as heteropoles.
C4N- □ 2 □	2NC (速动型) 2NC (Quick-action type)	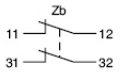	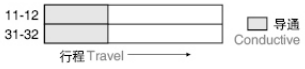	仅 NC 接点 (11-12、31-32) 具有强制断开功能 (⊖)。 Only NC contact (31-32) has forced disconnect function (⊖) 接点 (11-12) 和 (31-32) 可作异极使用。 Contacts (11-12) and (31-32) can be used as heteropoles.
C4N- □ A □	1NC/1NO (慢动型) 1NC/1NO (Slow-action type)	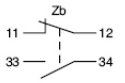	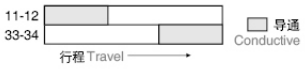	仅 NC 接点 (11-12) 具有强制断开功能 (⊖)。 Only NC contact (11-12) has forced disconnect function (⊖) 接点 (11-12) 和 (33-34) 可作异极使用。 Contacts (11-12) and (33-34) can be used as heteropoles.
C4N- □ B □	2NC (慢动型) 2NC (Slow-action type)	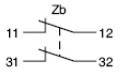	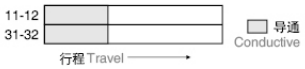	仅 NC 接点 (11-12、31-32) 具有强制断开功能 (⊖)。 Only NC contact (31-32) has forced disconnect function (⊖) 接点 (11-12) 和 (31-32) 可作异极使用。 Contacts (11-12) and (31-32) can be used as heteropoles.

动作特性 Operating Characteristics

■ 速动型 (1NC/1NO)(2NC)、慢动型 (2NC)
Quick-action type (1NC/1NO)(2NC), slow-action type (2NC)

动作特性 Action characteristics		型号 Model	C4N-□120 C4N-□220 C4N-□B20	C4N-□122 C4N-□222 C4N-□B22	C4N-□125 C4N-□225 C4N-□B25	C4N-□226 C4N-□B26	C4N-□131 C4N-□231 C4N-□B31	C4N-□132 C4N-□232 C4N-□B32	C4N-□162 C4N-□262 C4N-□B62	C4N-□172 C4N-□272 C4N-□B72	C4N-□12H C4N-□22H C4N-□B2H	C4N-□12G C4N-□12M C4N-□22G C4N-□B2G*4	C4N-□□80	C4N-□□87
动作力 Action force	OF	最大 Max.	5.0N				6.5N	6.5N	5.0N	5.0N	4.5N		1.5N	1.5N
回复力 Restore force	RF	最小 Min.	0.5N				1.5N	1.5N	0.8N	0.8N	0.4N			
预行程 Pretravel	PT		18~27°				2mm	2mm	4mm	4mm	18 ~ 27°		15°	15°
过行程 Overtravel	OT	最小 Min.	40°				4mm	4mm	5mm	5mm	40°			
响应差的行程 Poor response travel	MD	最大 Max.*1	14°				1mm	1mm	1.5mm	1.5mm	14°			
动作位置 Action position	OP		——				18.2±0.5mm	28.6±0.8mm	37±0.8mm	27±0.8mm	——			
总行程 Total travel	TT	*2	(80°)				(6mm)	(6mm)	(9mm)	(9mm)	(80°)			
强制断开预行程 Forced disconnected pretravel	DOT	最小 Min.*3	50°				3.2mm	3.2mm	5.8mm	4.8mm	50°			
强制断开力 Forced disconnected force	DOF	最小 Min.*3	20N				20N	20N	20N	20N	20N			

注 2NC 接点的闭路-开路动作的同时性会有参差，使用时请注意确认。
*1. 仅限速动型。
*2. 为参考值。
*3. 仅限慢动型。为了安全使用，请确保所有值在最大或最小范围内。
*4. 为摆杆长度 32 mm 时的特性。

Note The simultaneity of ON / OFF operation of 2NC contacts have difference, please make sure before using it.
*1. Only for quick-action type.
*2. Reference values.
*3. Only for slow-action type. For safe use, please make sure that all values are within the range of maximum or minimum.
*4. The property value when length of lever is 32mm.

动作特性 Operating Characteristics

■ 慢动型 (1NC/1NO)
Slow-action type (1NC/1NO)

动作特性 Action characteristics		型号 Model	C4N-□A20	C4N-□A22	C4N-□A25	C4N-□A26	C4N-□A31	C4N-□A32	C4N-□A62	C4N-□A72	C4N-□A2H	C4N-□A2G *8
动作力 Action force	OF	最大 Max.	5.0N				6.5N	6.5N	5.0N	5.0N	4.5N	
回复力 Restore force	RF	最小 Min.	0.5N				1.5N	1.5N	0.8N	0.8N	0.4N	
预行程 Pretravel	PT	*1	18 ~ 27°				2mm	2mm	4mm	4mm	18 ~ 27°	
	PT	(2nd)*2	(44°)				(2.9mm)	(2.9mm)	(5.2mm)	(4.3mm)	(44°)	
	PT	*3	27.5 ~ 36.5°				2.8mm	2.8mm	4mm	4mm	27.5 ~ 36.5°	
	PT	(2nd)*4	(18°)				(1mm)	(1mm)	(1.5mm)	(1.5mm)	(18°)	
过行程 Overtravel	OT	最小 Min.	40°				4mm	4mm	5mm	5mm	40°	
动作位置 Action position	OP		——				18.2 ± 0.5mm	28.6 ± 0.8mm	37 ± 0.8mm	27 ± 0.8mm	——	
	OP	*5	——				17.4 ± 0.5mm	28 ± 0.8mm	36 ± 0.8mm	26.1 ± 0.8mm	——	
总行程 Total travel	TT	*6	(80°)				(6mm)	(6mm)	(9mm)	(9mm)	(80°)	
强制断开预行程 Forced disconnected pretravel	DOT	最小 Min.*7	50°				3.2mm	3.2mm	5.8mm	4.8mm	50°	
强制断开力 Forced disconnected force	DOF	最小 Min.*7	20N				20N	20N	20N	20N	20N	

*1. NC 接点呈开路。
*2. NO 接点呈闭路。
*3. 仅限 MBB 型。
*4. 为 MBB 型的参考值。
*5. 仅限 MBB 型。
*6. 为参考值。
*7. 为了安全使用，请确保所有值在最大或最小范围内。
*8. 为摆杆长度 32 mm 时的特性。

*1. NC contact is open.
*2. NO contact is closed.
*3. Only for MBB type.
*4. It is the reference value of MBB type.
*5. Only for MBB type.
*6. Reference values
*7. For safe use, please make sure that all values are within the range of maximum or minimum.
*8. The property value when length of lever is 32mm.

外观和尺寸 Appearance and Dimension

C4N-4131

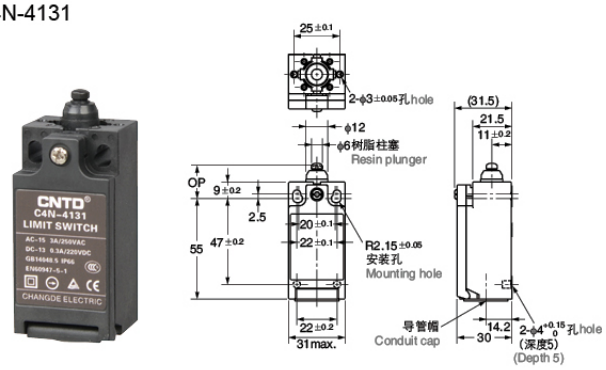

C4N-4132

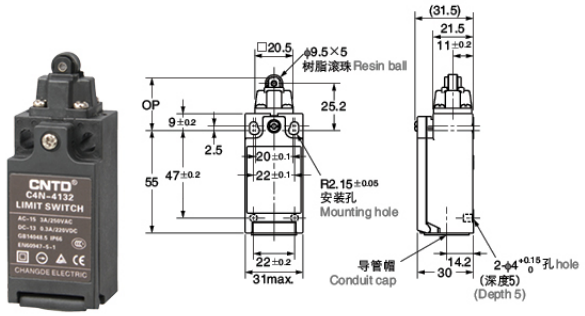

C4N-4162

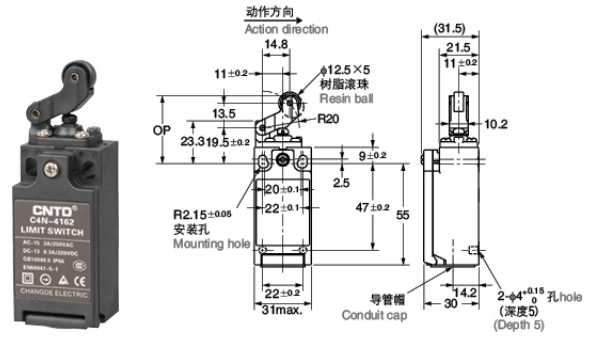

C4N-4172

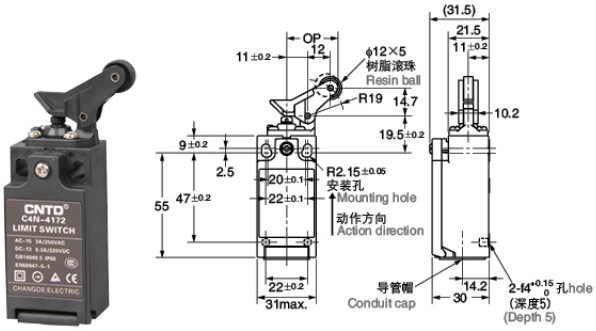

外观和尺寸 Appearance and Dimension

C4N-4120

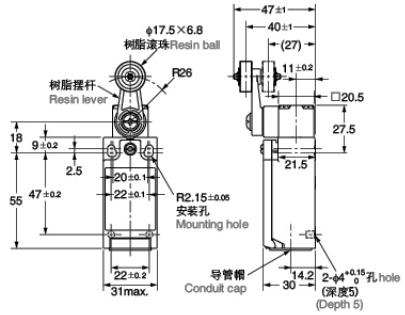

C4N-4122

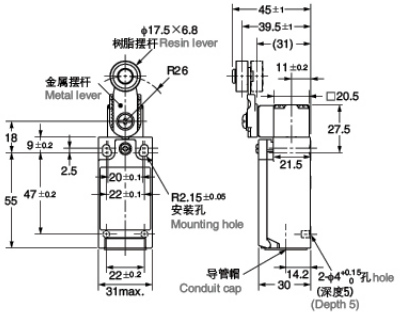

C4N-412M

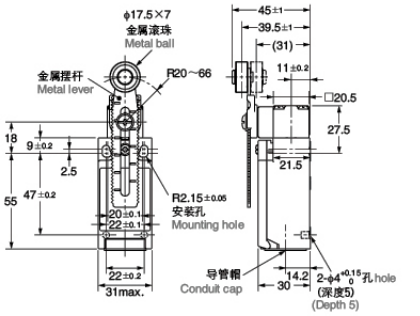

C4N-4125

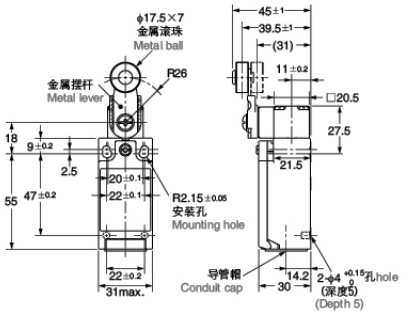

C4N-412G

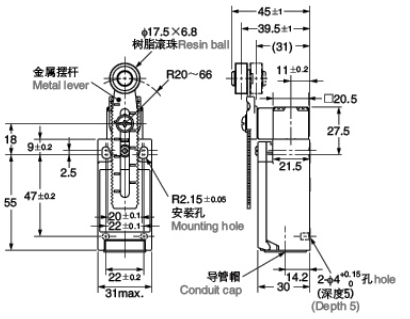

C4N-412H

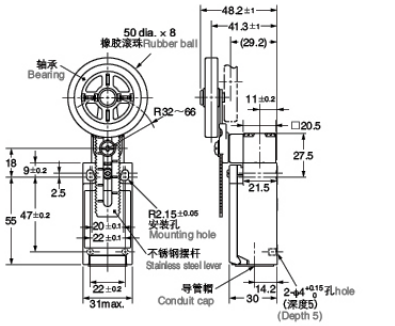

C4N-4180

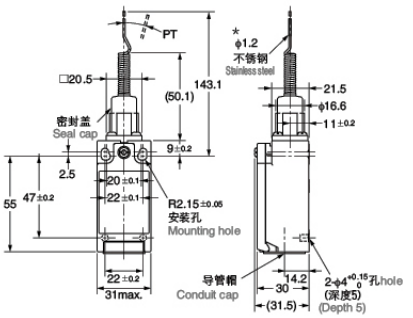

C4N-4187

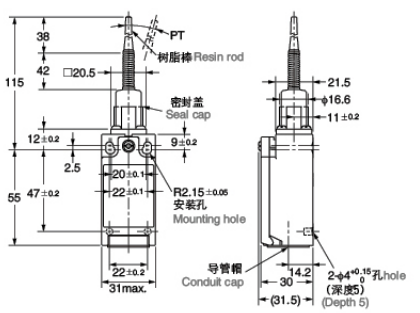

C4N-8131

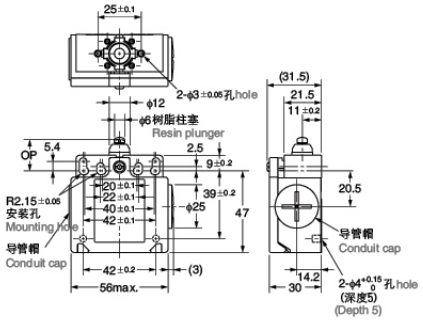

C4N-8132

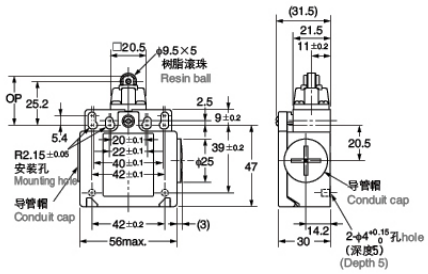

* 不锈钢垫圈和塑料棒的使用范围从前端 35mm 以内，整个动作在 70mm 以内。
* Application of stainless steel washers and plastic stick are within 35mm from the front end, the entire action is within 70mm.

外观和尺寸 Appearance and Dimension

C4N-8162

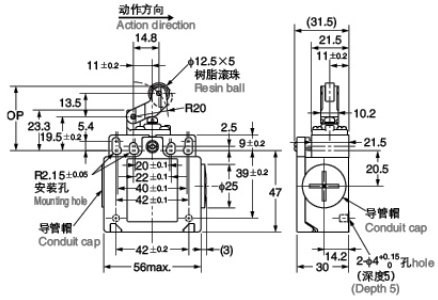

C4N-8172

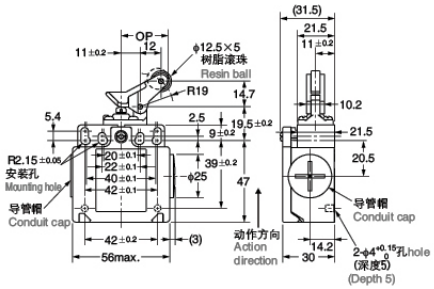

C4N-8120

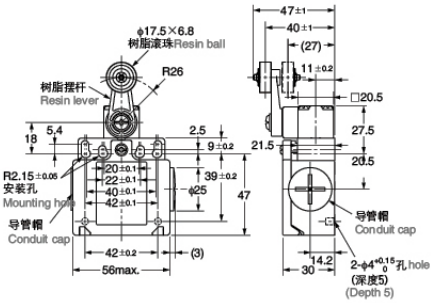

C4N-8122

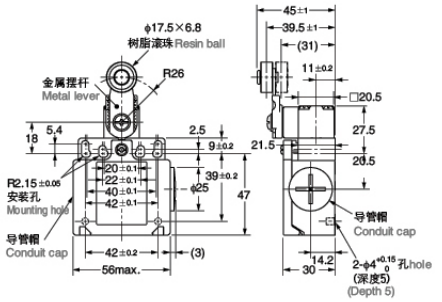

C4N-812M

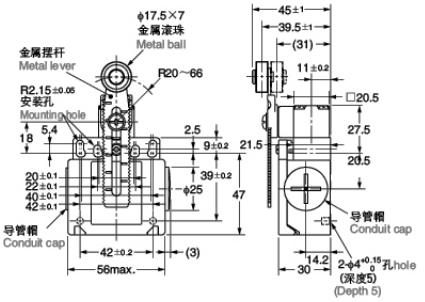

C4N-8125

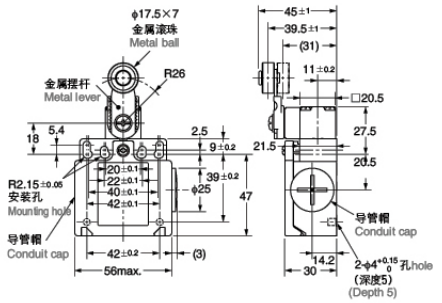

C4N-812G

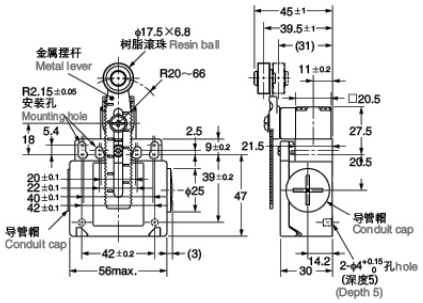

C4N-812H

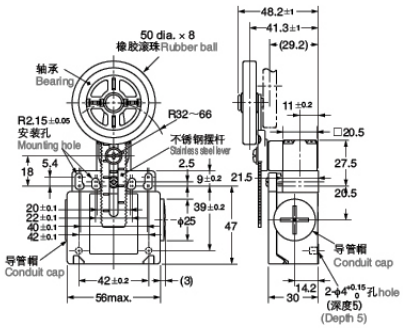

C4N-8180

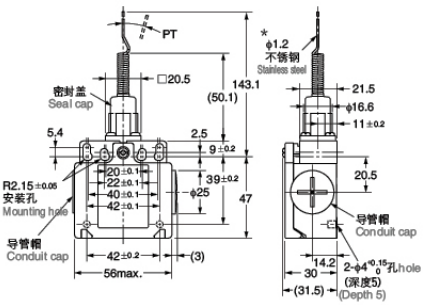

C4N-8187

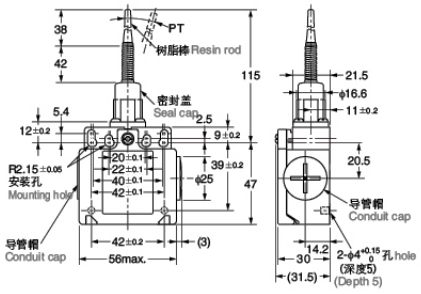

* 不锈钢垫圈和塑料棒的使用范围从前端 35mm 以内，整个动作在 70mm 以内
* Use of application of stainless steel washers and plastic stick are within 35mm from the front end, the entire action is within 70mm

C4N-□R 立式手动复位限位开关
Vertical Manual Reset Safety Limit Switch

CNTD® 昌得电气

型号说明 Model Number Structure

C4N – [4] [A] [3] [1] [R]

① ② ③

项目 Item	代号 Code	说明 Description
① 导管 / 连接器尺寸 Conduit / connector size	1	Pg13.5 (1 导管型) Pg13.5 (1 conduit type)
	4	M20 (1 导管型) M20 (1 conduit type)
	5	Pg13.5 (2 导管型) Pg13.5 (2 conduits type)
	8	M20 (2 导管型) M20 (2 conduits type)
② 内藏开关 Built-in switch	A	1NC/1NO (慢动型) 1NC/1NO (slow-action type)
	B	2NC (慢动型) 2NC (slow-action type)
③头部及传动杆 Head and driving rod	20	滚珠摆杆型 (树脂摆杆 , 树脂滚珠) Roller lever (resin lever, resin ball)
	22	滚珠摆杆型 (金属摆杆 , 树脂滚珠) Roller lever (metal lever, resin ball)
	25	滚珠摆杆型 (金属摆杆 , 金属滚珠) Roller lever (metal lever, metal resin ball)
	2G	可调滚珠摆杆，Form Lock (金属摆杆 , 树脂滚珠) Adjustable roller lever, Form Lock (metal lever, resin ball)
	2H	可调滚珠摆杆，Form Lock (金属摆杆 , 橡胶滚珠) Adjustable roller lever, Form Lock (metal lever, rubber ball)
	2M	可调滚珠摆杆，Form Lock (金属摆杆 , 金属滚珠) Adjustable roller lever, Form Lock (metal lever, metal resin ball)
	31	顶部柱塞型 Top plunger type
	32	顶部柱塞滚珠型 Top plunger ball type
	62	单侧悬臂滚珠型 (水平) Unilateral cantilever ball type (horizontal)
	72	单侧悬臂滚珠型 (垂直) Unilateral cantilever ball type (vertical)

注：导管连接器尺寸常规默认为 M20x1.5。
NOTE: The default size of conduit connector is M20x1.5.

特点 Features

- 强制断开动作装置 (仅 NC 接点)，可以在发生像接点熔断等故障时断开接点
- 强化顶部密封结构，以提高密封性能
- 内藏接点座具有慢动型：1NC/1NO、2NC

- Forced open action device(NC contacts only), to disconnect the contact when the contact has fusing and other failures
- Strengthened top seal structure improves the sealing performance
- Built-in contact holder has slow-action: 1NC /1NO and 2NC

规格 Specifications

保护等级 Protection level		IP66
寿命 Life	电气 Electrical	50 万次以上 (AC250V 3A、电阻负载) More than 500,000 times (AC250V 3A, resistive load) 30 万次以上 (AC250V 10A、电阻负载) More than 300,000 times (AC250V 10A, resistive load)
操作速度 Operating speed		1mm-0.5m/s(C4N-4A20R 型)
动作频率 Operating frequency		最大 30 次 /min Max. 30 times/min
接触电阻 Contact resistance		25mΩ 以下 25 mΩ or less
最小使用负载 Minimum working load		DC5V 1mA 电阻负载 (N 标准参考值) 1mA resistive load below DC5V (N standard reference value)
额定绝缘电压 (UI) Rated insulation voltage (Ui)		300V
防触电保护等级 Electric shock protection grade		Class Ⅱ (双重绝缘) Class II (double insulated)
污染度 (使用环境) Pollution degree (Using conditions)		污染度 3(EN60947-5-1) Pollution degree 3 (EN60947-5-1)
耐电压 Withstand voltage (EN60947-5-1)		同极端子间 : 2.5kV Between homopolar terminals: 2.5kV
		异极端子间 : 4kV Between heteropolar terminals: 2.5kV
		各端子和非充电金属部间 : 6kV Between terminals and uncharged metal parts: 6kV
绝缘电阻 Insulation resistance		100MΩ 以上 Above 100MΩ
接点间隙 Contact gap		最小 2 × 0.5mm 速动型 最小 2 × 2mm 慢动型 Minimum 2 × 0.5mm quick-action type, Minimum 2 × 2mm slow-action type
振动 Vibration	误动作 Malfunction	10 ~ 55Hz 0.75mm 单振幅 10 ~ 55Hz 0.75mm single amplitude
冲击 Impact	耐久 Duration	1,000m/s²
	误动作 Malfunction	300m/s²
环境温度 Ambient temperature		使用时：-20~+70℃（没有结冰） Using: -20~+70℃（With no icing）
环境湿度 Ambient humidity		95%RH 以下 Less than 95% RH
质量 Weight		约 92g(D4N-1A20R) About 92g (D4N-1A20R)

注 1. 上述值为初始值。
注 2. 一旦接点连接标准负载后，就不可用于连接更小容量的负载。否则可能导致接点表面粗糙，从而失去接触可靠性。
*1. 保护等级是根据 (EN60947-5-1) 规格的测试法得出的。使用前务必在实际使用的环境、条件下确认其密封性。 开关盒本体具有防尘、防油构造，但应尽可能保持头部在没有碎屑粉尘、油污、化学品的场所进行使用。否则可能导致过早磨损、损坏或故障。
*2. 耐久性的条件是使用环境温度 5℃ ~ 35℃、使用环境湿度 40% ~ 70% RH。其他详细条件请另行查询。
*3. 使用环境温度为 35℃以上时，禁止使用 2 回路以上的 3A AC250V 负载。
*4. 这个值会因为开关频率、环境条件、可靠性等级等因素的影响而不同。请事先在实际负载上进行确认。

Note 1. The above values are initial values.
Note 2. Once the contact is connected to a standard load, it can not be used to connect a smaller load. If so, the contact may result in rough surface, thus losing contact reliability.
*1. The protection level is gotten based on test method of (EN60947-5-1). Please make sure its sealing under actual environmental conditions before use. The switch box has dust and oil resistance structure, but it should be used in places without dust, oil and chemicals. Otherwise it may lead to premature wear, damage or malfunction.
*2. The durability is for ambient temperature of 5℃ ~ 35℃ and humidity of 40% to 70% RH. For additional details, please contact us.
*3. When the ambient temperature is above 35℃, more than 2 circuits 3A 250VAC loads are prohibited.
*4. The values will vary with different switching frequency, environmental conditions, reliability level and other factors. Please confirm on the actual load in advance.

强制断开机构 Forced Disconnecting Mechanism

■ 1NC、1NO 接点 (慢动型)
1NC and 1NO contacts (slow-action type)

仅限 NC 接点侧有强制断开构造。
当发生溶着时，通过按下柱塞，可以分离接点，切断回路。(符合 EN60947-5-1 强制断开操作)。
Only NC contact has forced disconnect structure.
When melting occurs, the contact can be isolated by pressing the plunger to cut off the loop. (In accordance with EN60947-5-1 force disconnect operation).

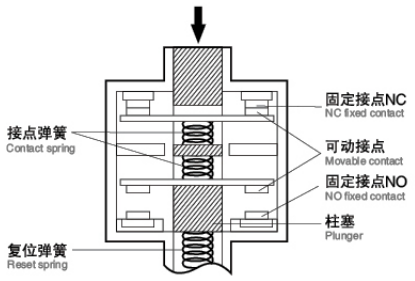

■ 2NC 接点 (慢动型)
2NC contacts (slow-action type)

双侧 NC 接点均具有强制断开构造。
当发生溶着时，通过按下柱塞，可以分离接点，切断回路。(符合 EN60947-5-1 强制断开操作)。
When melting occurs, the contact can be isolated by pressing the plunger to cut off the loop. (In accordance with EN60947-5-1 force disconnect operation).

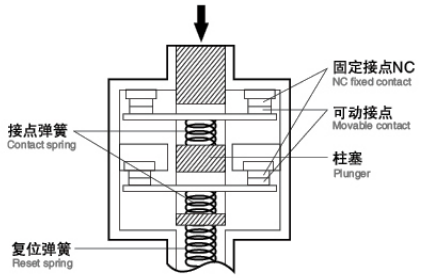

接点形式 Contact Form

型号 Model	接点 Contact	接点形式 Contact form	动作模式 Operation mode	说明 Explanation
C4N- □A□R	1NC/1NO (慢动型) 1NC/1NO (Slow-action type)	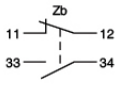		仅 NC 接点 (11-12) 具有强制断开功能 (⊖)。 Only NC contact (11-12) has forced disconnect function (⊖) 接点 (11-12) 和 (33-34) 可作异极使用。 Contacts (11-12) and (33-34) can be used as heteropoles.
C4N- □B□R	2NC (慢动型) 2NC (Slow-action type)	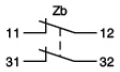	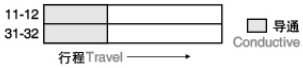	仅 NC 接点 (11-12、31-32) 具有强制断开功能 (⊖)。 Only NC contact (31-32) has forced disconnect function (⊖) 接点 (11-12) 和 (31-32) 可作异极使用。 Contacts (11-12) and (31-32) can be used as heteropoles.

动作特性 Operating Characteristics

型号 Model		C4N- □□ 20R	C4N- □□ 22R	C4N- □□ 2GR *2	C4N- □□ 2HR	C4N- □□ 31R	C4N- □□ 32R	C4N- □□ 62R	C4N- □□ 72R
LF	最大 Max.	6.45N	6.45N	5.6N	5.4N	10.8N	10.8N	7.5	7.9N
LT	最大 Max.	55°	55°	55°	55°	4.5mm	4.5mm	7mm	7mm
PT1	*3	18~27°	18~27°	18~27°	18~27°	2mm	2mm	4mm	4mm
PT2	*4	(44°)	(44°)	(44°)	(44°)	(2.9mm)	(2.9mm)	(5.2mm)	(4.3mm)
OP		--	--	--	--	34 ± 0.5mm	44.4 ± 0.8mm	53 ± 0.8mm	27 ± 0.8mm
TT	*5	80°	80°	80°	80°	(6mm)	(6mm)	(9mm)	(9mm)
DOT	最小 Min. *6	50°	50°	50°	50°	3.2mm	3.2mm	5.8mm	5.8mm
DOF	最小 Min.* 6	20N		20N	20N	20N	20N	20N	20N

注
*1. 2NC 接点的闭路 / 开路动作的同时性有所参差，使用时请务必确认。
*2. 摆杆长 32mm 时的特性值。
*3. NC 接点为开路 (OFF) 状态时的 PT 值。
*4. NO 接点闭合 (ON) 时的 PT 一般值 (仅限 1NC/1NO 型)。
*5. 参考值。
*6. 强制断路构造的负载和行程值。 为保证安全，请务必保持在规定的上限和下限范围内。

Note
*1. The simultaneity of ON / OFF operation of 2NC contacts have difference, please make sure before using it.
*2. The property value when length of lever is 32mm.
*3. PT value when NC contact is at open (OFF) state.
*4. PT common value when NO contact is at close (ON) state (only for 1NC/1NO types).
*5. Reference values.
*6. Load and travel values of forced disconnect structure. To ensure safety, be sure to remain within the upper and lower range.

外观和尺寸 Appearance and Dimension

C4N-4A31R

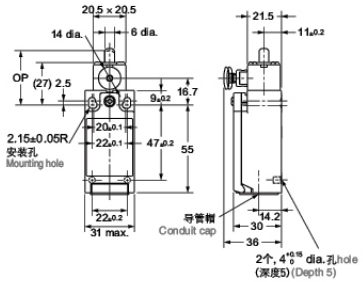

C4N-4A32R

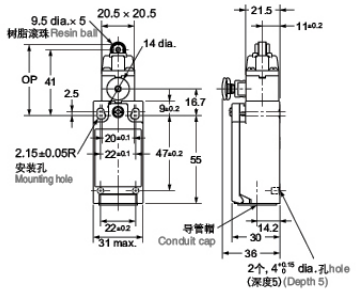

C4N-4A62R

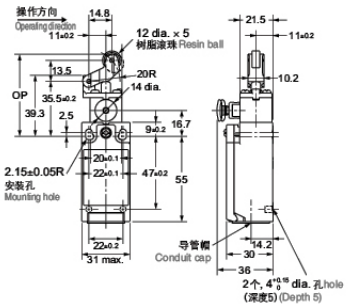

C4N-4A72R

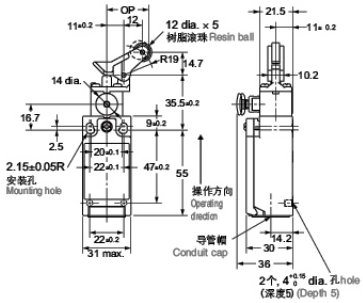

C4N-4A20R

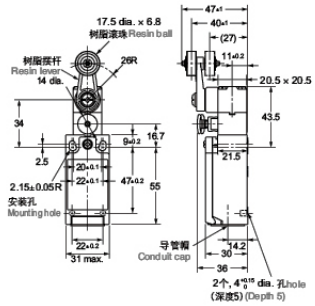

C4N-4A22R

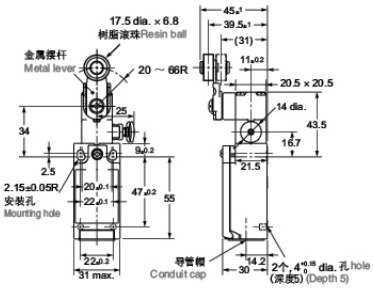

C4N-4A2GR

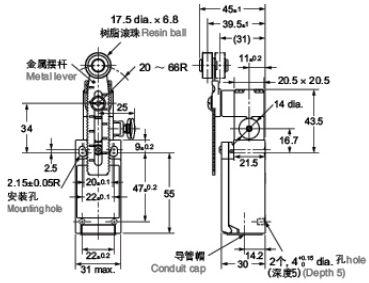

C4N-4A25R

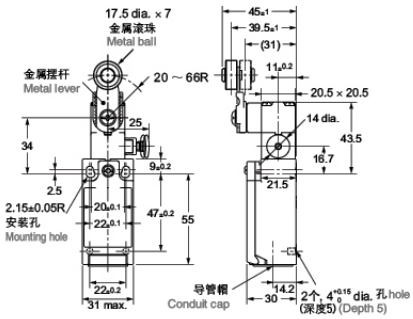

C4N-4A2MR

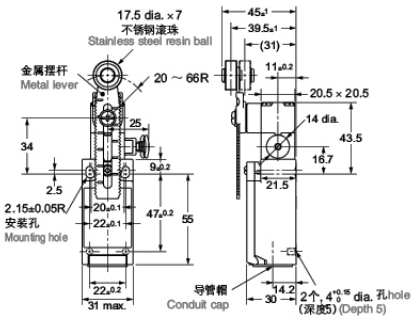

C4N-4A2HR

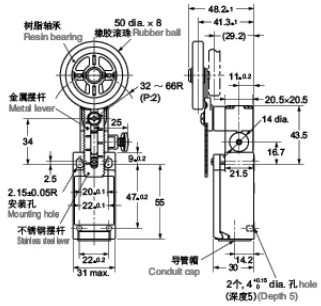

外观和尺寸 Appearance and Dimension

C4N-8A31R

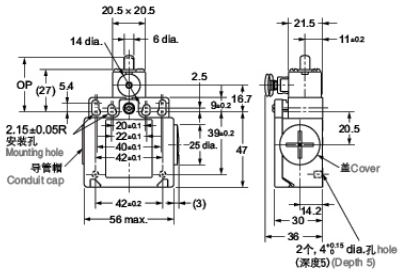

C4N-8A32R

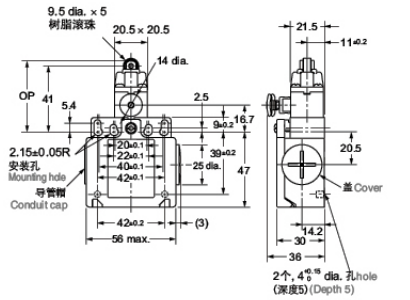

C4N-8A62R

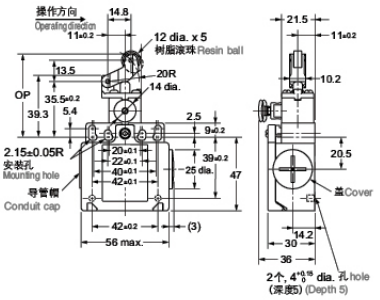

C4N-8A72R

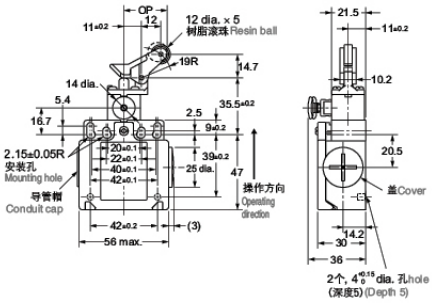

C4N-8A20R

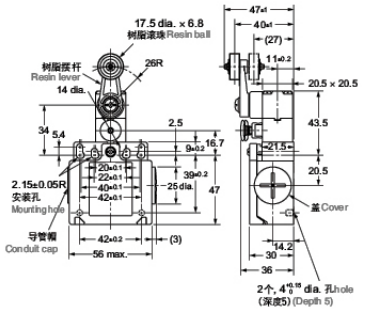

C4N-8A22R

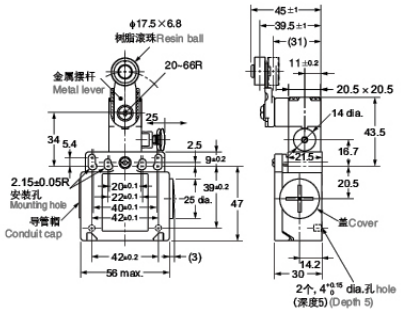

C4N-8A2MR

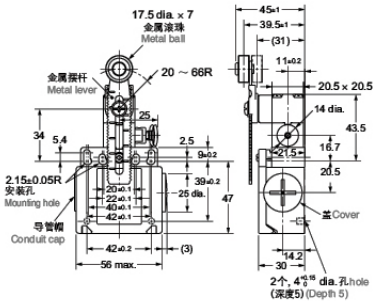

C4N-8A25R

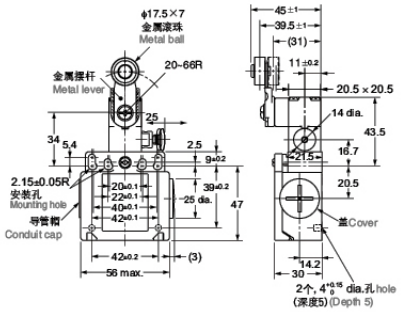

C4N-8A2GR

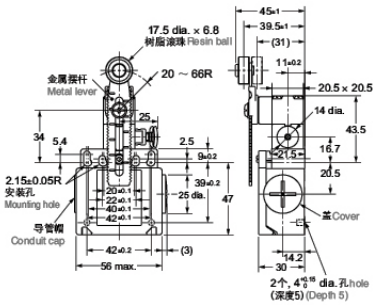

C4N-8A2HR

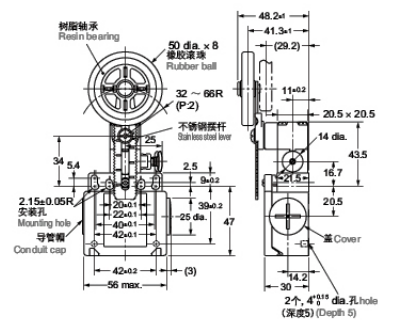

C4B-□N 立式安全限位开关 Vertical Safety Limit Switch

CNTD® 昌得电气

特点 Features

- 强制断开动作装置（仅 NC 接点），可以在发生像接点熔断等故障时断开接点
- 强化顶部密封结构，以提高密封性能
- 内藏接点座具有速动型：1NC/1NO；慢动型：1NC/1NO、2NC

- Forced open action device (NC contacts only), to disconnect the contact when the contact has fusing and other failures
- Strengthened top seal structure improves the sealing performance
- Built-in contact holder has fast-action type: 1NC / 1NO; Slow-action: 1NC / 1NO and 2NC

型号说明 Model Number Structure

C4B — [4] [1] [1] [5] [N]

① ② ③

项目 Item	代号 Code	说明 Description
① 导管 / 连接器尺寸 Conduit / connector size	1	Pg13.5 (1 导管型) Pg13.5 (1 conduit type)
	4	M20 (1 导管型) M20 (1 conduit type)
② 内藏开关 Built-in switch	1	1NC/1NO (速动型) 1NC/1NO (quick-action type)
	5	1NC/1NO (慢动型) 1NC/1NO (slow-action type)
	A	2NC (慢动型) 2NC (slow-action type)
③头部及传动杆 Head and driving rod	11	滚珠摆杆型 (树脂摆杆 , 树脂滚珠) Roller lever (resin lever, resin ball)
	12	可调滚珠摆杆，Form-Lock (金属摆杆 , 金属滚珠) Adjustable roller lever, Form-Lock (metal lever, metal ball)
	15	滚珠摆杆型 (金属滚珠) Roller lever (metal ball)
	16	可调滚珠摆杆，Form-Lock (树脂滚珠) Adjustable roller lever, Form-Lock (resin ball)
	17	可调棒式摆杆，Form-Lock (长条杆) Adjustable stick lever, Form-Lock (long lever)
	18	可调滚珠摆杆，Form Lock (金属摆杆 , 橡胶滚珠) Adjustable roller lever, Form Lock (metal lever, rubber ball)
	70	顶滚珠柱塞型 Top ball plunger type
	71	滚珠柱塞型 Ball plunger type
	72	滚珠柱塞型 Ball plunger type
	81	线圈弹簧型 Coil spring type
	87	塑料棒型 Plastic stick type
	86	金属棒型 Metal stick type

注：导管连接器尺寸常规默认为 M20x1.5。
NOTE: The default size of conduit connector is M20x1.5.

额定值 Ratings

额定电压 (V) Rated voltage (V)		非感性负载 (A) Non-inductive load (A)				感性负载 (A) Inductive load (A)			
		阻性负载 Resistive load		灯负载 Lamp load		感性负载 Inductive load		电动机负载 Motor load	
		NC	NO	NC	NO	NC	NO	NC	NO
AC	125	10		3	1.5	10		5	2.5
	250	10		2	1	10		3	1.5
	400	10		1.5	0.8	3		1.5	0.8
DC	8	10		6	3	10		6	
	14	10		6	3	10		6	
	30	6		4	3	6		4	
	125	0.8		0.2	0.2	0.8		0.2	
	250	0.4		0.1	0.1	0.4		0.1	

注 1. 上述数值表示恒定电流。
注 2. 所谓感性负载，是功率因数 0.4 以上 (交流)、时间常数 7ms 以下 (直流的负载)。
注 3. 所谓灯负载就是有 10 倍浪涌电流的负载。
注 4. 所谓电动机负载，就是有 6 倍浪涌电流的负载。

Note1.The above values represent constant current.
2.The so-called inductive load refers to the load with power factor of 0.4 or more (AC) and the time constant below 7ms (DC).
3.The so-called lamp load refers to the load with 10 times of surge current.
4.The so-called motor load is the load with 6 times of surge current.

规格 Specifications

保护等级 Protection level		IP66
寿命 Life	电气 Electrical	50 万次以上 (AC250V 10A、电阻负载) More than 500,000 times (AC250V 10A, resistive load)
操作速度 Operating speed		1mm~0.5m/s
操作频率 Operating frequency	机械 Mechanical	120 次 /min 120 times/min
	电气 Electrical	30 次 /min 30 times/min
额定频率 Rated frequency		50/60Hz
绝缘电阻 Insulation resistance		同极端子之间、及端子与不带电金属部之间 100MΩ 以上 (DC500V 兆欧表) 100MΩ or more (DC500V Megameter) between homopolars, and between terminals and uncharged metal parts
接触电阻 Contact resistance		25mΩ 以下 (初期值) 5mΩ or less (initial value)
耐电压 Withstand voltage (EN60947-5-1)		同极端子间 : 2.5kV(速动型)/4kV(慢动型) Between homopolar terminals: 2.5kV(quick-action type)/4kV(slow-action type)
		异极端子间 : 4kV(慢动型) Between heteropolar terminals: 2.5kV(slow-action type)
		带电金属部之间 : 4kV Between charged metal parts: 4kV
		各端子与不带电金属部之间 : 6kV Between terminals and uncharged metal parts: 6kV
额定绝缘电压 (UI) Rated insulation voltage (Ui)		600V(EN60947-5-1)
开闭时逆电压 Reverse voltage when on/off		1500V max (EN60947-5-1)
污染度 (使用环境) Pollution degree (environmental conditions)		污染度 3(EN60947-5-1) Pollution degree 3 (EN60947-5-1)
防触电保护等级 Electric shock protection grade		Class I (带接地端子) Class I (with ground terminal)
振动 Vibration	误动作 Malfunction	10 ~ 55Hz 0.75mm 单振幅 10 ~ 55Hz 0.75mm single amplitude
冲击 Impact	耐久 Duration	1,000m/s^2
	误动作 Malfunction	300m/s^2
环境温度 Ambient temperature		使用时: -20~+80℃（没有结冰） Using: -20~+80℃（With no icing）
环境湿度 Ambient humidity		95%RH 以下 Less than 95% RH
质量 Weight		约 250g About 250g

注 1. 上述值为初始值。
注 2. 有些型号中可能与上述内容不同，请另外垂询。
*1. 该保护结构基于标准 (EN69047-5-1) 规定的测试方法，请根据使用环境、使用条件来事先确认密封性。
*2. 寿命的条件为环境温度 5 ~ 35℃、环境湿度 40 ~ 70%RH 时的数值。

Note 1. The above are initial values.
Note 2. Values of some models may be different from the above, please contact us for details.
*1. The protection structure is tested based on method predetermined by standard (EN69047-5-1), please confirm the sealing in advance according to the operating environment and conditions.
*2. The conditions of life are the values under the ambient temperature of 5~35℃ and humidity of 40 to 70% RH. For other detailed conditions, please contact us.

强制断开机构 Forced Disconnecting Mechanism

■ 1NC、1NO 接点 (速动型)
1NC and 1NO contacts (quick-action type)

①熔接发生 Welding occurs

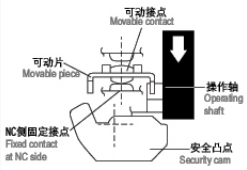

EN60947-5-1 的强制断开认定⊖(仅 NC 接点侧有直接开路动作功能)。
Forced disconnect find of ⊖ EN60947-5-1 (Only NC contact side has direct opening action function).

②正在跳开 Tripping

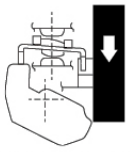

③分离完毕
Separation is completed

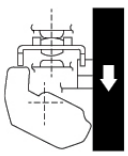

安全凸轮按下直接分离可动片
Security cams is directly pressed to separate the movable piece

■ 1NC、1NO 接点 (慢动型)
1NC and 1NO contacts (slow-action type)

EN60947-5-1 的强制断开认定⊖(仅 NC 接点侧有强制断开功能)。熔接发生时，通过柱塞的压下 NC 接点分离，回路切断。
Forced disconnect find ⊖ of EN60947-5-1 (Only NC contact side has forced disconnect function). When welding occurs, NC contact is separated by pressing the plunger and the loop is cut off.

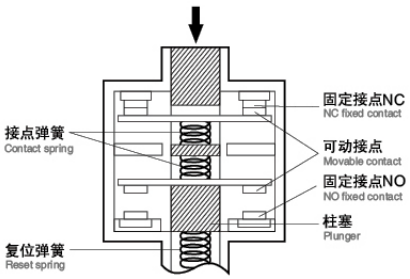

■ 2NC 接点 (慢动型)
2NC contacts (slow-action type)

EN60947-5-1 的强制断开认定⊖(仅 NC 接点侧有强制断开功能)。
Forced disconnect find ⊖ of EN60947-5-1 (Only NC contact side has forced disconnect function).

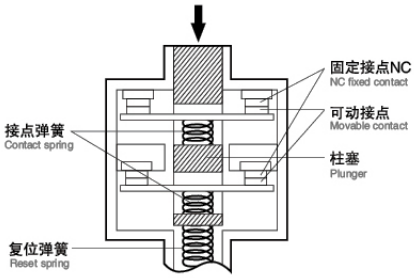

接点形式 Contact form

型号 Model	接点 Contact	接点形式 Contact form	动作模式 Operation mode	说明 Explanation
C4B-□1□N	1NC/1NO (速动型) 1NC/1NO (Quick-action type)	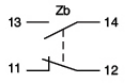		仅 NC 接点 (11-12) 带强制断开功能，取得认证 (端子 No.11-12、13-14 不可作异极使用) Only NC contact (11-12) has forced disconnect function and got the certification (terminal No.11-12,13-14 can not be used as different heteropoles)
C4B-□5□N	1NC/1NO (慢动型) 1NC/1NO (Slow-action type)	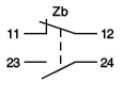		仅 NC 接点 (11-12) 带强制断开功能，取得认证 (端子 No.11-12、13-14 不可作异极使用) Only NC contact (11-12) has forced disconnect function and got the certification (terminal No.11-12,13-14 can not be used as different heteropoles)
C4B-□A□N	2NC (慢动型) 2NC (Slow-action type)	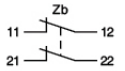	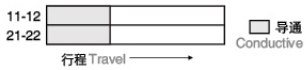	两个 NC 接点 (11-12、21-22) 带强制断开功能，取得认证 (端子 No.11-12、21-22 可以作异极使用) Two NC contacts (11-12, 21-22) have forced disconnect function and got the certification (terminal No.11-12,21-22 can be used as different heteropoles)

动作特性 Operating Characteristics

动作特性 Action characteristics	型号 Model		C4B-□□11N	C4B-□□15N	C4B-□□16N *1	C4B-□□17N *2	C4B-□□18N *2	C4B-□□70N	C4B-□□71N	C4B-□□81N	C4B-□□86N	C4B-□□87N
动作力 Action force	OF	最大 Max.	9.41N	9.41N	9.41N	2.12N	9.41N	18.63N	18.63N	1.47N	1.47N	1.47N
回复力 Restore force	RF	最小 Min.	1.47N	1.47N	1.47N	0.29N	1.47N	1.96N	1.96N			
预行程 Pretravel	PT		21° ± 3°	21° ± 3°	21° ± 3°	21° ± 3°	21° ± 3°	2mm	2mm	15	15	15
	PT	(2nd) *3 *5	(45°)	(45°)	(45°)	(45°)	(45°)	(3mm)	(3mm)			
过行程 Overtravel	OT	最小 Min.	50°	50°	50°	50°	50°	5mm	5mm			
响应差的行程 Poor response travel	MD	最大 Max. *4	12°	12°	12°	12°	12°	1mm	1mm			
强制断开预行程 Forced disconnected pretravel	DOT	最小 Min. *3*6	35°	35°	35°	35°	35°	3.2mm	3.2mm			
		*4*6	55°	55°	55°	55°	55°					
强制断开力 Forced disconnected force	DOF	最小 Min. *6	19.61N	19.61N	19.61N	19.61N	19.61N	49.03N	49.03N			
总行程 Total travel	TT	*5	(75°)	(75°)	(75°)	(75°)	(75°)	(7mm)	(7mm)			
自由位置 Free position	FP	最大 Max.						38mm	51mm			
动作位置 Action position	OP							35 ± 1mm	48 ± 1mm			

注 2NC 接点 ON/OFF 动作的同时性有差异，使用时请确认。
*1. 摆杆长度为 31.5mm 时的特性值。
*2. 杆长为 140mm 时的特性值。
*3. 仅慢动型。
*4. 仅速动型。
*5. 参考值。
*6. 为了保证安全使用请务必加以确保。

Note The simultaneity of ON / OFF operation of 2NC contacts have difference, please make sure before using it.
*1. The property value when length of lever is 31.5mm.
*2. The property value when length of lever is 140mm.
*3. Only for slow-action type.
*4. Only for quick-action type.
*5. Reference values.
*6. Please make sure in order to ensure the safe use.

外观和尺寸 Appearance and Dimension

C4B-4111N

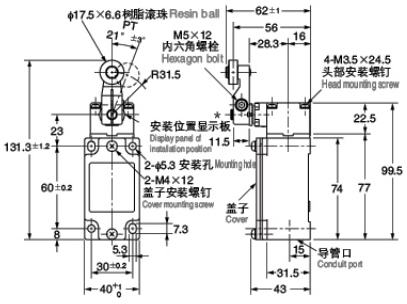

C4B-4115N

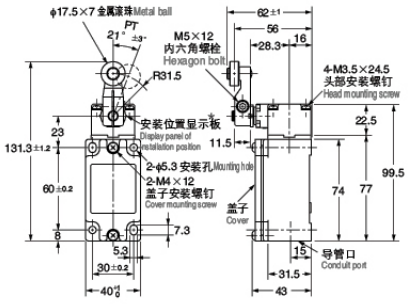

外观和尺寸 Appearance and Dimension

C4B-4116N

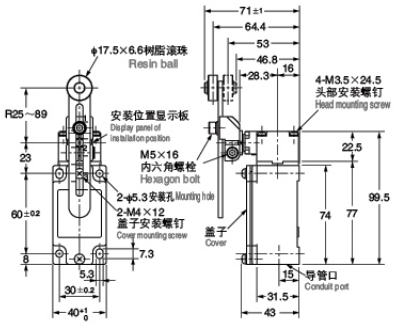

C4B-4112N

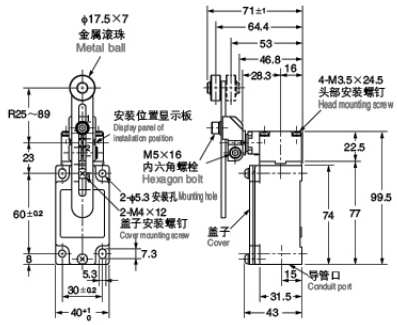

C4B-4118N

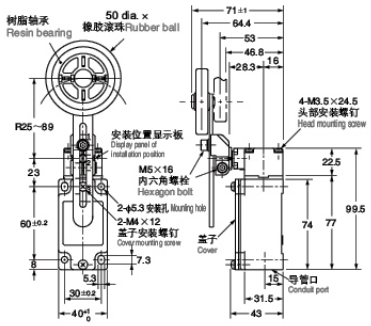

C4B-4170N

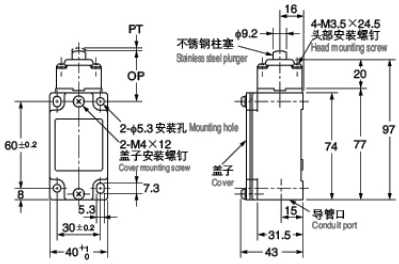

C4B-4171N

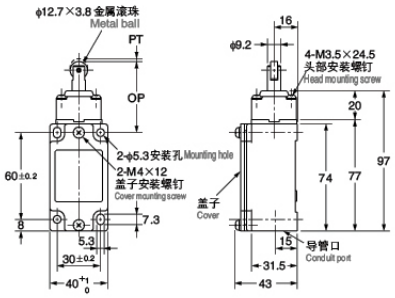

C4B-4172N

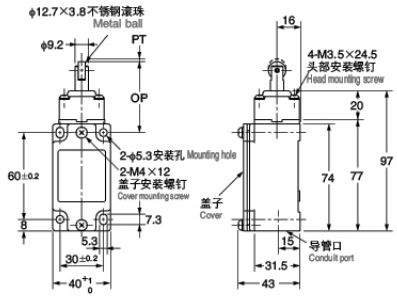

C4B-4117N

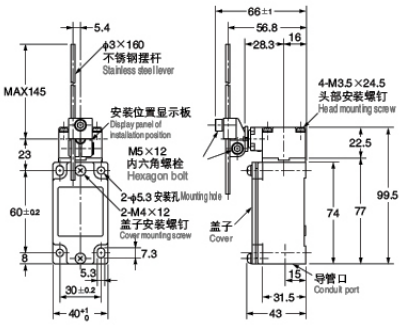

C4B-4181N

结构上不是安全限位开关，为一般限位开关
If the switch is not safety limit switch in structure, it is common limit switch

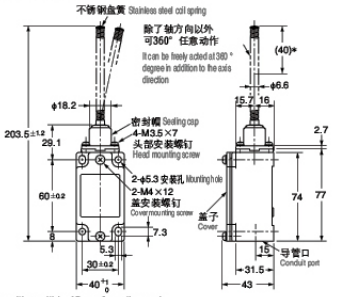

应该设定在离端部 40mm 的位置内触及挡块
It should be set that the stopper is touched at the position within 40mm from the end

C4B-4186N

结构上不是安全限位开关，为一般限位开关
If the switch is not safety limit switch in structure, it is common limit switch

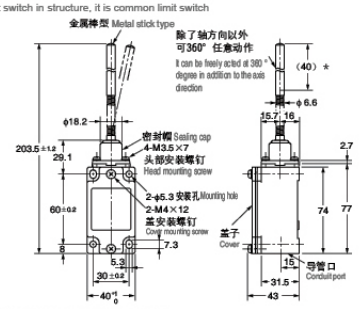

应该设定在离端部 40mm 的位置内触及挡块
It should be set that the stopper is touched at the position within 40mm from the end

C4B-4187N

结构上不是安全限位开关，为一般限位开关
If the switch is not safety limit switch in structure, it is common limit switch

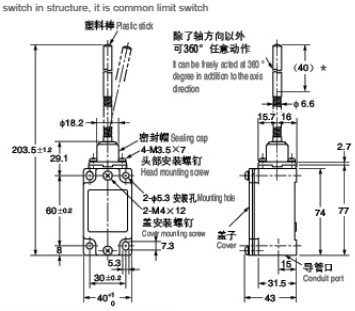

应该设定在离端部 40mm 的位置内触及挡块
It should be set that the stopper is touched at the position within 40mm from the end

CM 卧式限位开关
Horizontal Limit Switch

CNTD® 昌得电气

特点 Features

- 引动器种类广泛，其中包含动作位置可调整的款式 (如 CM1701)
- 高精确度广泛操作速度范围

- Various actuators and some with adjustable operating position (such as CM1701)
- High accuracy wide range of operation speed

接点型式 Contact Form

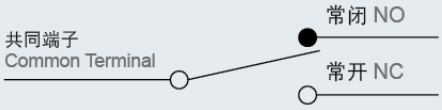

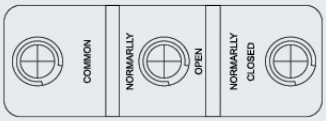

额定值 Ratings

额定电压 Rated Voltage	非电感性负载 Noninductive Load (A)				电感性负载 Inductive Load (A)				突入电流 (A) Inrush Current	
	电阻性负载 Resistance Load		灯泡负载 Lamp Load		电感性负载 Inductive Load		马达负载 Motor Load			
	NC	NO	NC	NO	NC	NO	NC	NO	NC	NO
125VAC	15		3	1.5	15		5	2.5	30 以下 max.	15 以下 max.
250VAC	15		2.5	1.25	15		3	1.5		
500VAC	3		1.5	0.75	2.5		1.5	0.75		
8VDC	15		3	1.5	15		5	2.5		
14VDC	15		3	1.5	10		5	2.5		
30VDC	6(2)		3	1.5	5		5	2.5		
125VDC	0.4		0.4	0.4	0.05		0.05	0.05		
250VDC	0.2		0.2	0.2	0.03		0.03	0.03		

规格 Specifications

操作速度 Operation speed	0.05mm 至 1m/s(柱塞型 Plunger type) 0.05mm-1m/s
动作频率 Operating frequency	电气 :20 次 / 分 Electical: 20 operations/min.
接点电阻 Contact resistance	15mΩ 以下 (初期) 15mΩ max. (initial value)
绝缘电阻 Insulation resistance	100mΩ 以上 (在 500VDC 以下) 100mΩ min. (at 500VDC)
电介强度 Dielectric Strength	非连续端子间 1,000VAC, 50/60Hz 持续 1 分钟 1000VAC, 50/60 Hz for 1 minute between terminals of the same polarity
	载电流与无载电流零件间 1,500VAC, 50/60Hz 持续 1 分钟 1500VAC, 50/60 HZ for 1 minute between current-carrying and non-current-carrying metal parts
	端子和接地之间 1,500VAC, 50/60Hz 持续 1 分钟 1500VAC, 50/60 HZ for 1 minute between each terminal and ground
振动 Vibration	(*10 至 20Hz): 1.5mm 变振幅误动作耐久 : 10 至 55Hz (*10 to 20Hz): 1.5 Vibration amplitude action duration: 10 to 55Hz
冲击 Shock	机械耐久 :1,000m/Sec²(约 100G’ S) 误动作耐久 :300m/Sec²(约 30G’ S) Mechanical durable: 1, 000m/Sec² (about 100G'S) Malfunction: 300m/Sec² (about 30G'S)
周围温度 Ambient temperature	使用时: -20~+80℃（没有结冰） Using: -20~+80℃（With no icing）
湿度 Humidity	泛用型 : 85%RH 以上 密封型 : 95%RH General purpose type: 85% RH max., Sealed type: 95% RH max.
电气寿命 Electrical life	500,000 次以上 500,000 operations above
重量 Weight	约 22 至 58g About 22 to 58g

动作特性 Operating Characteristics

型式 Models	CM1300	CM1301	CM1303 CM1303M	CM1305	CM1306	CM1307	CM1308 CM1308X	CM1309	CM1701 CM1706	CM1702	CM-1703 CM-1703M	CM-1704 CM-1704M	CM1705	CM-1743 CM-1743M
OF 最大 (Max.)	350g	300g	300g	350g	350g	350g	350g	350g	70g	160g	100g	160g	10g	160g
RF 最小 (Min.)	114g	50g	50g	114g	114g	114g	114g	114g	14g	28g	22g	42g	3g	42g
PT 最大 (Max.)	0.4mm	4mm	4mm	0.4mm	0.4mm	0.4mm	0.4mm	0.4mm	10mm	5mm	7.1mm	2.7mm	20mm	2.7mm
OT 最小 (Min.)	0.13mm	1.6mm	1.6mm	1.6mm	1.6mm	5.5mm	3.58mm	3.58mm	5.6mm	2mm	4mm	2.4mm	5.6mm	2.4mm
MD 最大 (Max.)	0.05mm	1.3mm	1.3mm	0.05mm	0.05mm	0.05mm	0.05mm	0.05mm	1.27mm	1mm	1.02mm	0.5mm	3mm	0.5mm
FP 最大 (Max.)		20.6mm	31.8mm						28.2mm	24.8mm	36.5mm	32.5mm		43.6mm
OP(mm)	15.9 ± 0.4	17.4 ± 0.8	28.6 ± 0.8	28.2 ± 0.5	21.5 ± 0.5	21.8 0.8	33.4 ± 1.2	33.4 ± 1.2	19 ± 0.8	19 ± 0.4	30.2 ± 0.8	30.2 ± 0.4	19 ± 0.8	43.1 ± 0.8

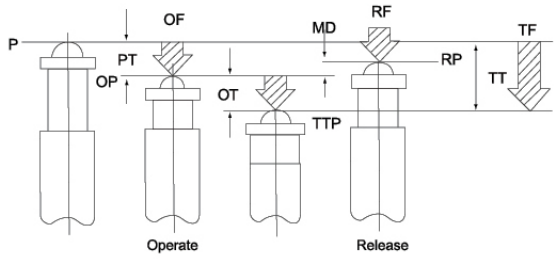

OF: 动作力
RF: 回复力
TF: 总行程动作力
FP: 自由位置
OP: 动作位置
RP: 返回位置
TTP: 总行程位置
PT: 预行程位置
OT: 过行程
MD: 响应差的行程
TT: 总行程

OF: Operating Force
RF: Releasing Force
TF: Total Force
FP: Free Position
OP: Operating Position
RP: Releasing Position
TTP: Total Tavel Position
PT: Pre Travel
OT: Over Travel
MD: Movement Differential
TT: Total Tavel

外观和尺寸 Appearance and Dimension

CM-1701

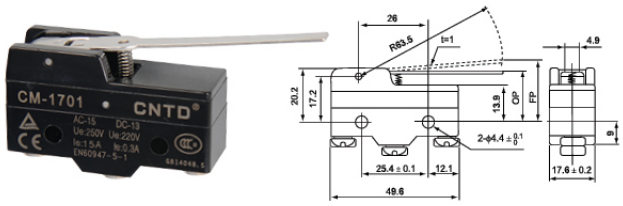

CM-1702

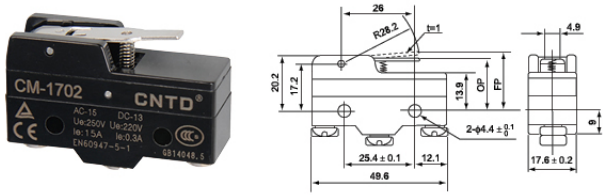

CM-1703

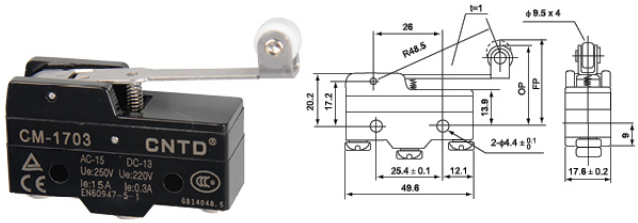

CM-1703M

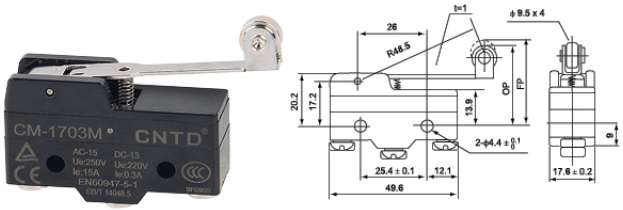

CM-1704

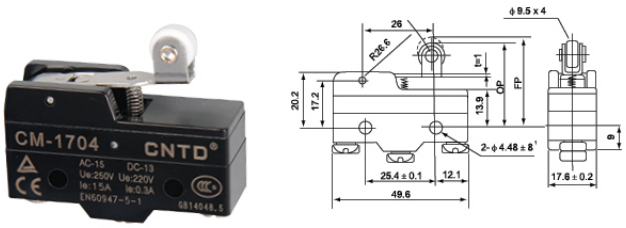

CM-1704M

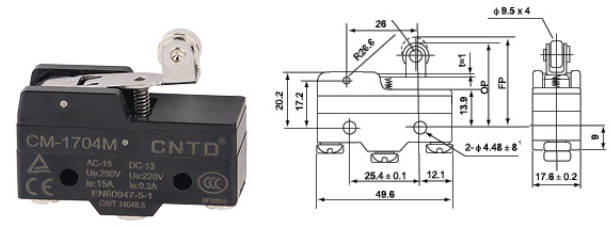

外观和尺寸 Appearance and Dimension

CM-1705

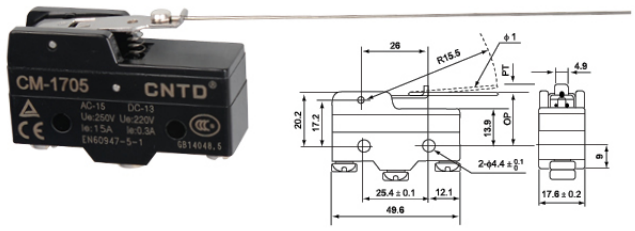

CM-1706

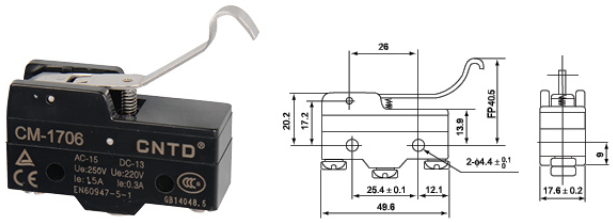

CM-1306

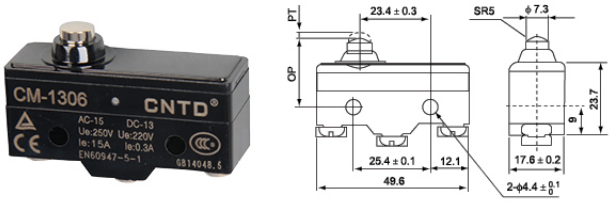

CM-1307

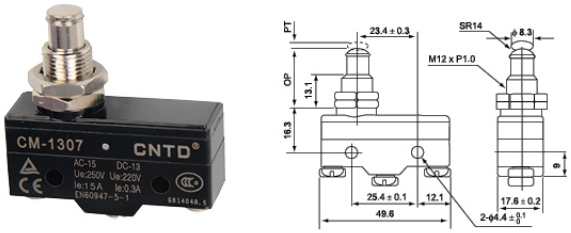

CM-1308

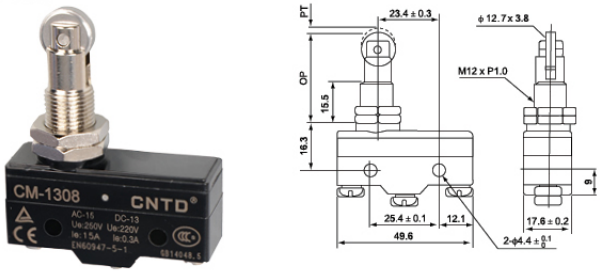

CM-1309

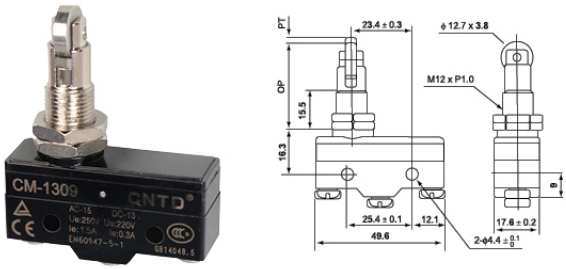

CM-1308X

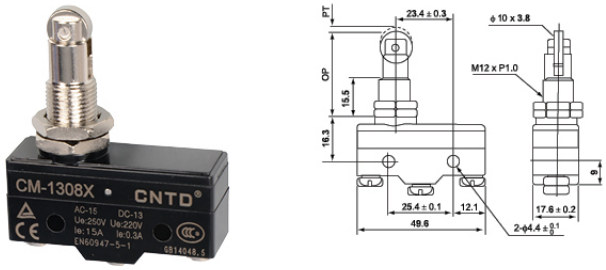

CM-1743

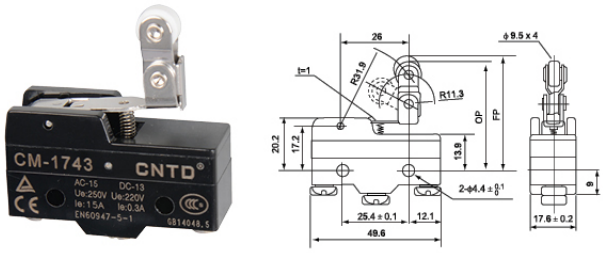

CM-1743M

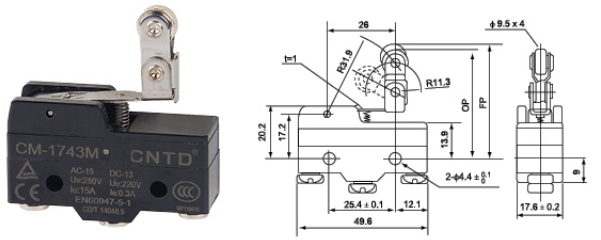

CM-1300

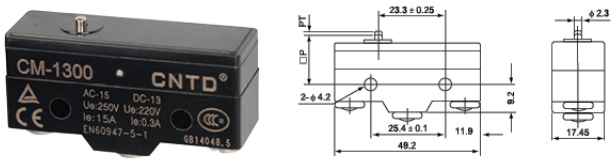

外观和尺寸 Appearance and Dimension

CM-1301

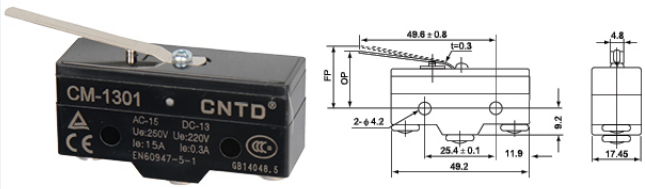

CM-1303

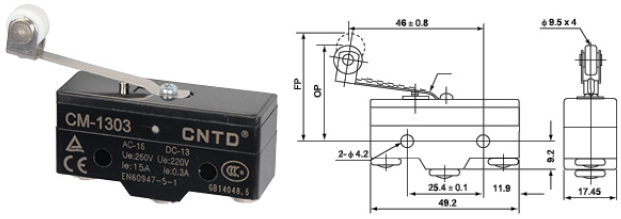

CM-1303M

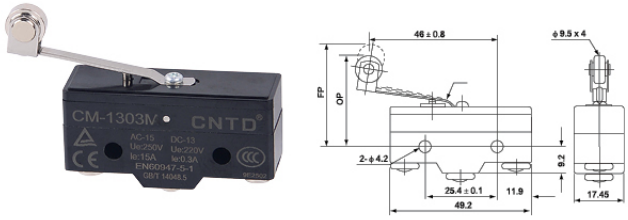

CM-1305

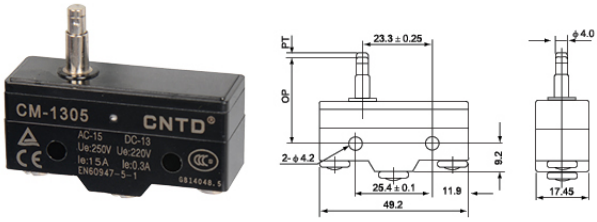

端子保护罩 Terminal Cover

CAP-Y

CAP-C

CAP-B

CM-□N 卧式限位开关 Horizontal Limit Switch

CNTD® 昌得电气

特点 Features

- 工程塑胶壳体，强度更高
- 引动器种类广泛，其中包含动作位置可调整的款式 (如 CM1701N)
- 高精确度广泛操作速度范围

- Engineering plastics shell for resistant construction
- Various actuators and some with adjustable operating position (such as CM1701N)
- High accuracy wide range of operation speed

接点型式 Contact Form

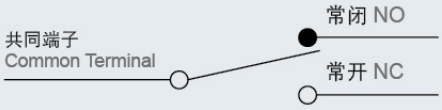

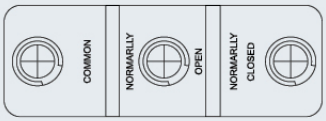

额定值 Ratings

额定电压 Rated Voltage	非电感性负载 Noninductive Load (A)				电感性负载 Inductive Load (A)				突入电流 (A) Inrush Current	
	电阻性负载 Resistance Load		灯泡负载 Lamp Load		电感性负载 Inductive Load		马达负载 Motor Load			
	NC	NO	NC	NO	NC	NO	NC	NO	NC	NO
125VAC	15		3	1.5	15		5	2.5	30 以下 max.	15 以下 max.
250VAC	15		2.5	1.25	15		3	1.5		
500VAC	3		1.5	0.75	2.5		1.5	0.75		
8VDC	15		3	1.5	15		5	2.5		
14VDC	15		3	1.5	10		5	2.5		
30VDC	6(2)		3	1.5	5		5	2.5		
125VDC	0.4		0.4	0.4	0.05		0.05	0.05		
250VDC	0.2		0.2	0.2	0.03		0.03	0.03		

规格 Specifications

操作速度 Operation speed	0.05mm 至 1m/s(柱塞型 Plunger type) 0.05mm-1m/s
动作频率 Operating frequency	电气 :20 次 / 分 Electical: 20 operations/min.
接点电阻 Contact resistance	15mΩ 以下 (初期) 15mΩ max. (initial value)
绝缘电阻 Insulation resistance	100MΩ 以上 (在 500VDC 以下) 100mΩ min. (at 500VDC)
电介强度 Dielectric Strength	非连续端子间 1,000VAC, 50/60Hz 持续 1 分钟 1000VAC, 50/60 Hz for 1 minute between terminals of the same polarity
	载电流与无载电流零件间 1,500VAC, 50/60Hz 持续 1 分钟 1500VAC, 50/60 HZ for 1 minute between current-carrying and non-current-carrying metal parts
	端子和接地之间 1,500VAC, 50/60Hz 持续 1 分钟 1500VAC, 50/60 HZ for 1 minute between each terminal and ground
振动 Vibration	(*10 至 20Hz): 1.5mm 变振幅误动作耐久 : 10 至 55Hz (*10 to 20Hz): 1.5 Vibration amplitude action duration: 10 to 55Hz
冲击 Shock	机械耐久 :1,000m/Sec²(约 100G’ S) 误动作耐久 :300m/Sec²(约 30G’ S) Mechanical durable: 1, 000m/Sec² (about 100G'S) Malfunction: 300m/Sec² (about 30G'S)
周围温度 Ambient temperature	使用时: -20~+70℃（没有结冰） Using: -20~+70℃（With no icing）
湿度 Humidity	泛用型 : 85%RH 以上 密封型 : 95%RH General purpose type: 85% RH max., Sealed type: 95% RH max.
电气寿命 Electrical life	500,000 次以上 500,000 operations above
重量 Weight	约 22 至 58g About 22 to 58g

动作特性 Operating Characteristics

型式 Models	CM1300N	CM1301N	CM1303N CM1303NM	CM1305N	CM1306N	CM1307N	CM1308N CM1308XN	CM1309N	CM1701N CM1706N	CM1702N	CM1703N CM1703NM	CM1704N CM1704NM	CM1705N	CM1743N CM1743NM
OF 最大 (Max.)	350g	300g	300g	350g	350g	350g	350g	350g	70g	160g	100g	160g	10g	160g
RF 最小 (Min.)	114g	50g	50g	114g	114g	114g	114g	114g	14g	28g	22g	42g	3g	42g
PT 最大 (Max.)	0.4mm	4mm	4mm	0.4mm	0.4mm	0.4mm	0.4mm	0.4mm	10mm	5mm	7.1mm	2.7mm	20mm	2.7mm
OT 最小 (Min.)	0.13mm	1.6mm	1.6mm	1.6mm	1.6mm	5.5mm	3.58mm	3.58mm	5.6mm	2mm	4mm	2.4mm	5.6mm	2.4mm
MD 最大 (Max.)	0.05mm	1.3mm	1.3mm	0.05mm	0.05mm	0.05mm	0.05mm	0.05mm	1.27mm	1mm	1.02mm	0.5mm	3mm	0.5mm
FP 最大 (Max.)		20.6mm	31.8mm						28.2mm	24.8mm	36.5mm	32.5mm		43.6mm
OP(mm)	15.9 ± 0.4	17.4 ± 0.8	28.6 ± 0.8	28.2 ± 0.5	21.5 ± 0.5	21.8 0.8	33.4 ± 1.2	33.4 ± 1.2	19 ± 0.8	19 ± 0.4	30.2 ± 0.8	30.2 ± 0.4	19 ± 0.8	43.1 ± 0.8

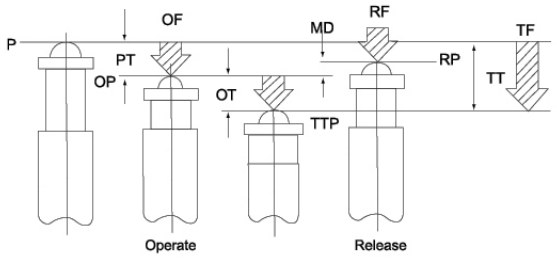

OF: 动作力	OF: Operating Force
RF: 回复力	RF: Releasing Force
TF: 总行程动作力	TF: Total Force
FP: 自由位置	FP: Free Position
OP: 动作位置	OP: Operating Position
RP: 返回位置	RP: Releasing Position
TTP: 总行程位置	TTP: Total Tavel Position
PT: 预行程位置	PT: Pre Travel
OT: 过行程	OT: Over Travel
MD: 响应差的行程	MD: Movement Differential
TT: 总行程	TT: Total Tavel

外观和尺寸 Appearance and Dimension

CM-1701N

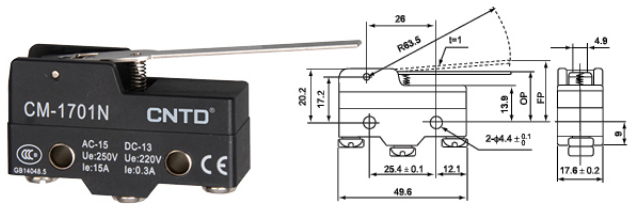

CM-1702N

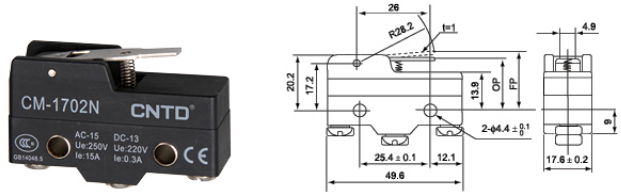

CM-1703N

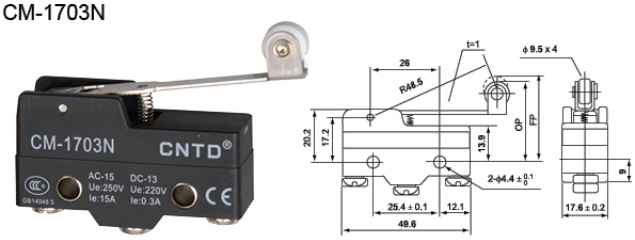

CM-1703NM

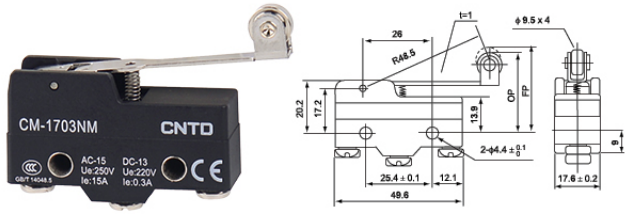

CM-1704N

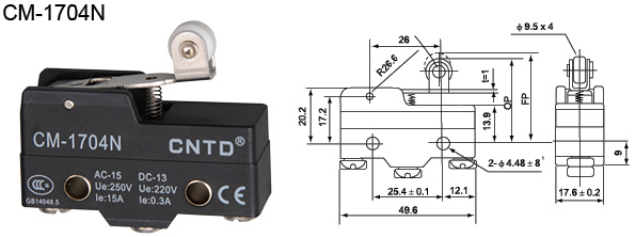

CM-1704NM

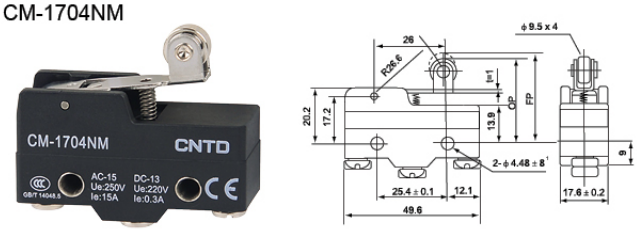

CM-1705N

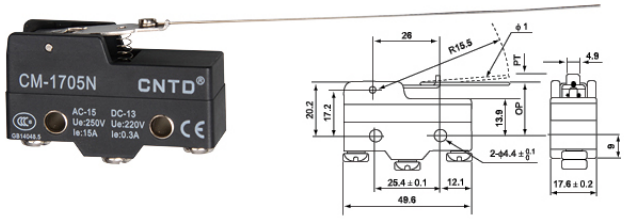

CM-1706N

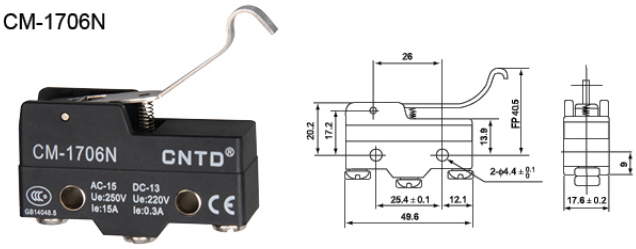

外观和尺寸 Appearance and Dimension

CM-1306N

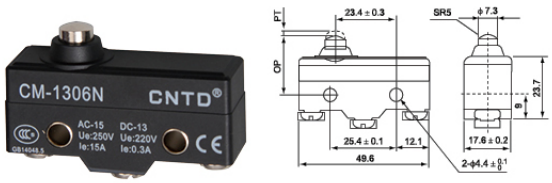

CM-1307N

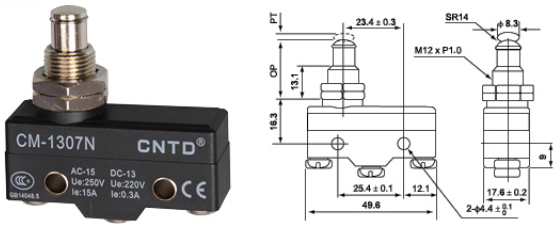

CM-1308N

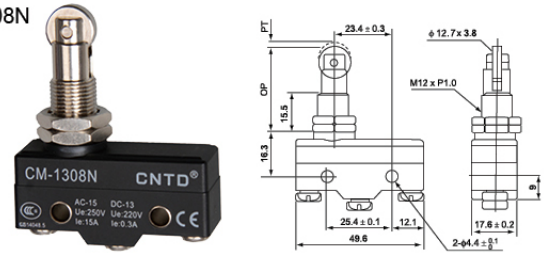

CM-1309N

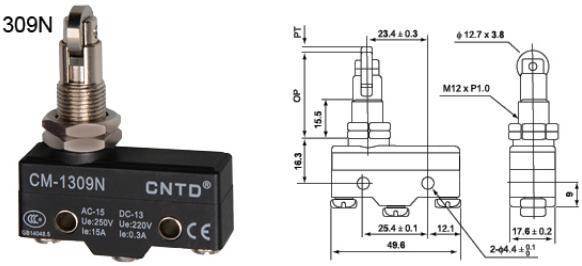

CM-1308XN

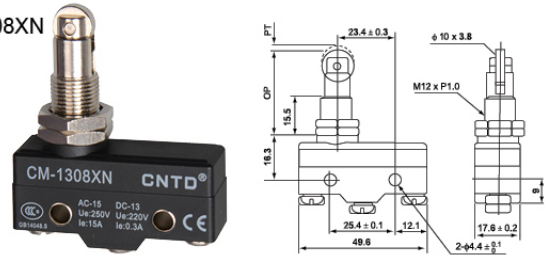

CM-1743N

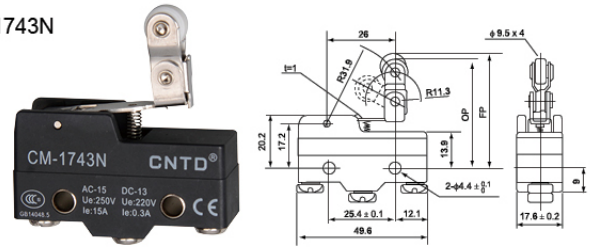

CM-1743NM

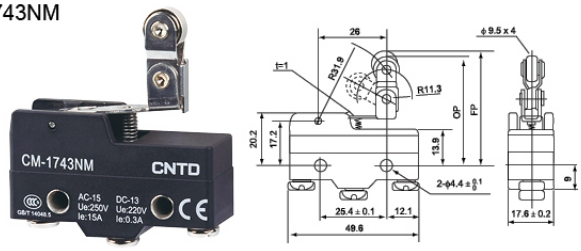

CM-1300N

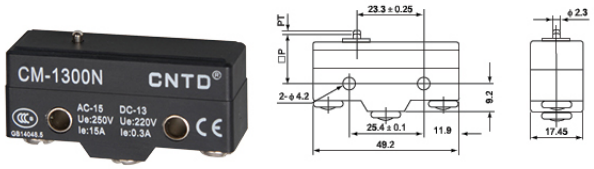

CM-1301N

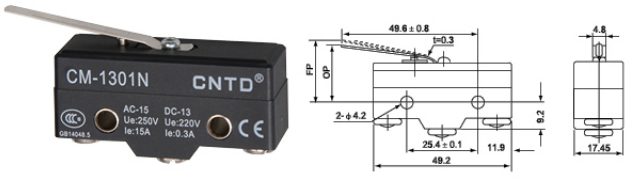

CM-1303N

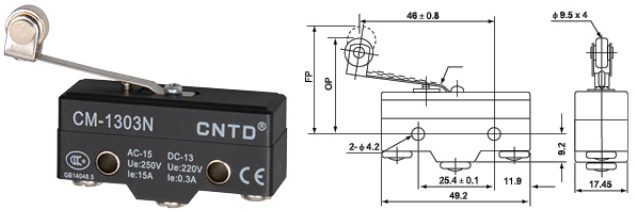

CM-1303NM

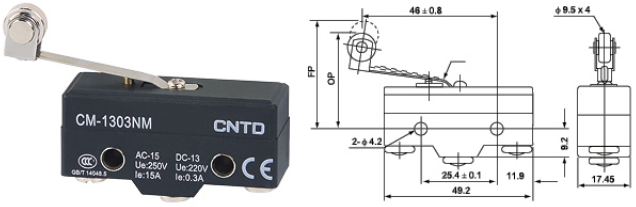

CM-1305N

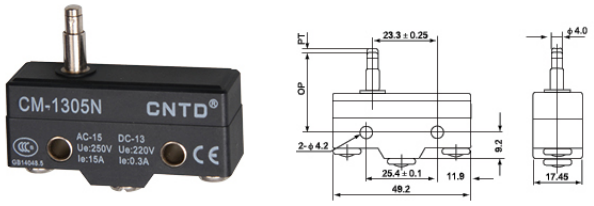

CZ-7 卧式限位开关
Horizontal Limit Switch

特点 Features

- 引动器种类广泛，其中包含动作位置可调整的款式（如 CZ-7121）
- 外壳包覆强化塑胶、防水、防油，较 CM 型卧式限位开关有更高的机械强度，耐冲击

- Various actuators and some with adjustable operating position (such as CZ-7121)
- Shell covered with intensive plastic for water-proof and oil-proof. The mechanical strength is better than CM series of horizontal limit switch

接点型式 Contact Form

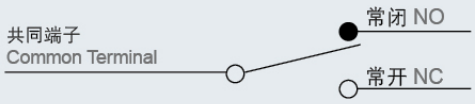

额定值 Ratings

额定电压 Rated Voltage	非电感性负载 Noninductive Load (A)				电感性负载 Inductive Load (A)			
	电阻性负载 Resistance Load		灯泡负载 Lamp Load		电感性负载 Inductive Load		马达负载 Motor Load	
	NC	NO	NC	NO	NC	NO	NC	NO
125VAC	10		3	1.5	10		5	2.5
250VAC	10		2.5	1.25	10		3	1.5
480VAC	3		1.5	0.75	2.5		1.5	0.75
8VDC	10		3	1.5	6		6	5
14VDC	10		3	1.5	6		6	5
30VDC	8		3	1.5	6		5	2.5
125VDC	0.5		0.4	0.4	0.05		0.05	0.05
250VDC	0.25		0.2	0.2	0.03		0.03	0.03

注 :1、电感性负载 : 功率因素 =0.4: 时间常数 =7msec。
2、灯泡负载之突入电流为稳定状态电流之 10 倍。
马达负载之突入电流为稳定状态电流之 6 倍。
3、带弹簧系列产品，操作体的使用范围为从弹簧的前端到弹簧全长的 1/3 以内。

NOTES: 1.Inductive load has a power factor of 0.4 min.(AC) and a time constant of 7 msec.max.(DC).
2.Lamp load has an inrush current of 10 times the steady-state current,while motor load has an inrush current of 6 times the steady-state current.
3.Product with spring, its usable range of operating part is within one third of the whole spring length from the front end of spring.

规格 Specifications

操作速度 Operation speed	0.05mm 至 0.5m/s 0.05mm-0.5m/s
动作频率 Operating frequency	电气 :20 次 / 分 Electical: 20 operations/min.
接点电阻 Contact resistance	25mΩ 以下 (初期) 25mΩmax. (initial value)
绝缘电阻 Insulation resistance	100MΩ 以上 (在 500VDC 以下) 100mΩ above(at 500VDC)
电介强度 Dielectric strength	非连续端子间 1,000VAC, 50/60Hz 持续 1 分钟 1000VAC, 50/60 Hz for 1 minute between terminals of the same polarity
	载电流与无载电流零件间 1,500VAC, 50/60Hz 持续 1 分钟 1500VAC, 50/60 Hz for 1 minute between current-carrying and non-current-carrying metal parts
	端子和接地之间 1,500VAC, 50/60Hz 持续 1 分钟 1500VAC, 50/60 Hz for 1 minute between each terminal and ground
振动 Vibration	误动作耐久 :10 至 55Hz, 1.5mm 双振幅 Malfunction Duration: 10-55Hz, 1.5mm double amplitude
冲击 Shock	机械耐久 :1,000m/Sec^2(约 100G’ S) 误动作耐久 :300m/Sec^2(约 30G’ S) Mechanical durable: 1,000m/Sec^2(about 100g's) Malfunction: 300m/Sec^2(about 30g's)
周围温度 Ambient temperature	使用时 :-20~+70℃ (没有结冰) Using: -20~+70℃ (With no icing)
湿度 Humidity	< 95% RH
电气寿命 Electrical life	500,000 次以上 500,000 operations above
重量 Weight	约 60g About 60g

动作特性 Operating Characteristics

型号	Model	CZ-7	CZ-7100	CZ-7110	CZ-7310	CZ-7311	CZ-7312	CZ-7120	CZ-7140	CZ-7121	CZ-7141	CZ-7124	CZ-7144	CZ-7166
操作力	Operating force	OF 最大 (Max.)	600g	600g	600g	600g	600g	150g	220g	180g	240g	200g	280g	120g
回弹力	Release force	RF 最小 (Min.)	100g	100g	100g	100g	100g	40g	60g	50g	80g	60g	100g	
预行程	Pre-travel	PT 最大 (Max.)	2.0mm	2.0mm	2.0mm	2.0mm	2.0mm	13.5mm	8.5mm	11.0mm	6.5mm	11mm	6.5mm	250mm
过行程	Over travel	OT 最小 (Min.)	0.8mm	5.0mm	6.0mm	6.0mm	6.0mm	4.0mm	2.5mm	3.0mm	2.0mm	3.0mm	2.0mm	11mm
行程移动分辨率	Movement differential	MD 最大 (Max.)	0.8mm	0.8mm	0.8mm	0.8mm	0.8mm	3.2mm	2.0mm	2.4mm	1.5mm	2.4mm	1.5mm	
动作位置	Operating position	OP(mm.)	30.5 ± 0.8mm	44 ± 1.2mm	21.8 ± 1.2mm	33.3 ± 1.2mm	33.3 ± 1.2mm	25 ± 1mm	25 ± 1mm	40 ± 1mm	40 ± 1mm	50 ± 1.2mm	50 ± 1.2mm	
自由位置	Free Position	FP						35mm	32mm		46mm		56mm	

外观和尺寸 Appearance and Dimension

CZ-7121

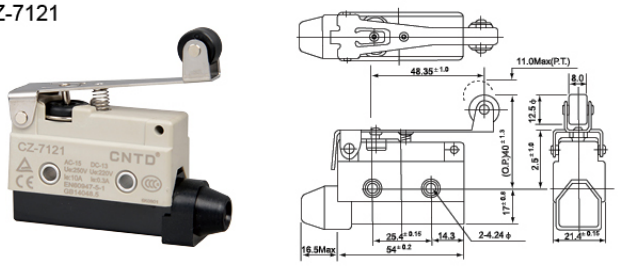

CZ-7141

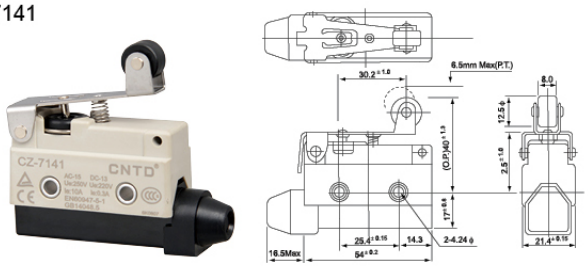

CZ-7120

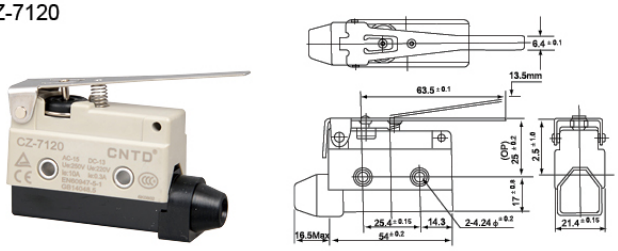

CZ-7140

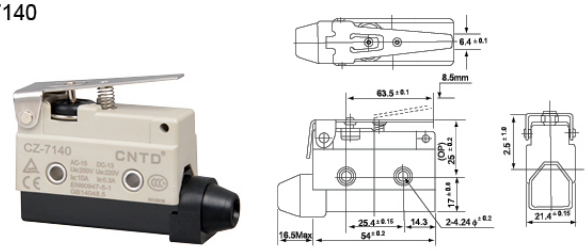

CZ-7124

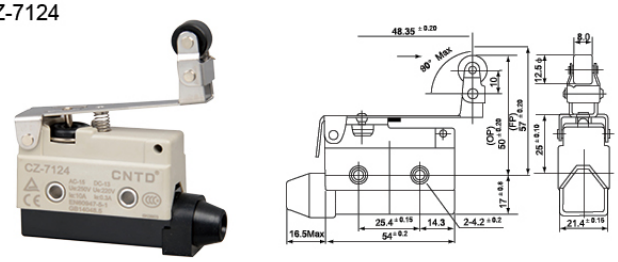

CZ-7144

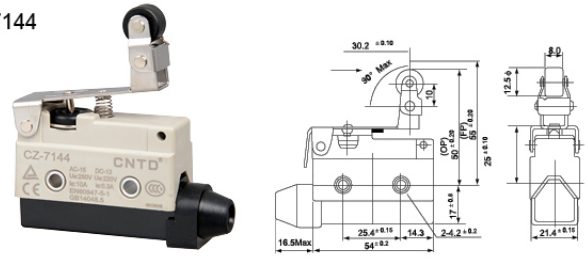

CZ-7100

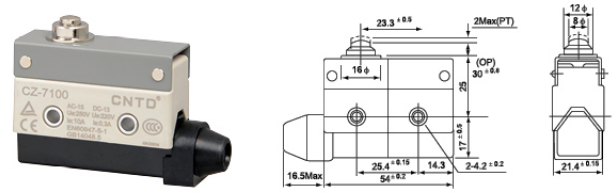

CZ-7110

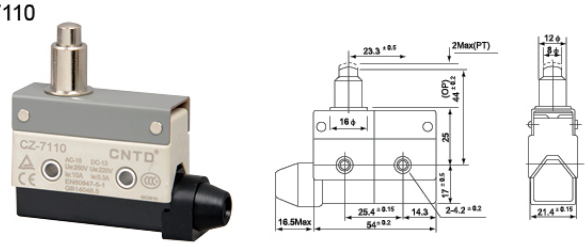

CZ-7310

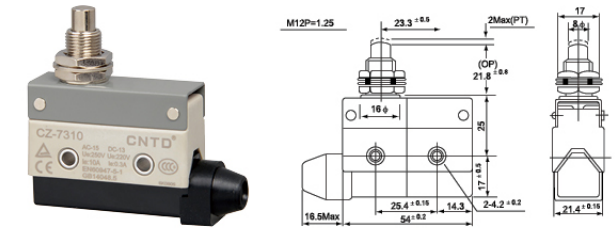

CZ-7311

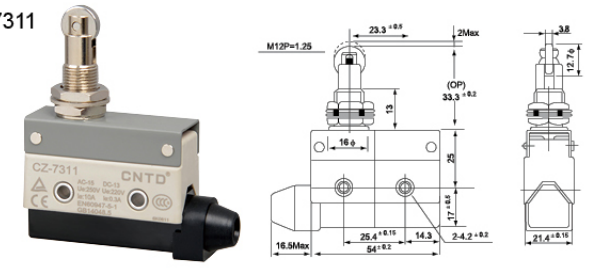

CZ-7312

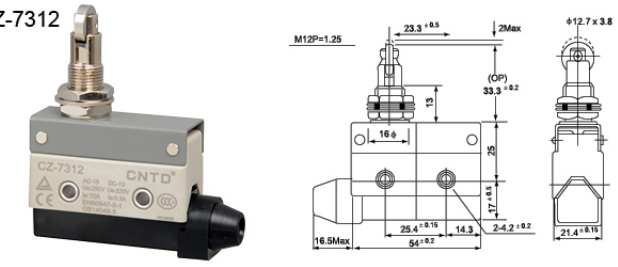

CZ-7166

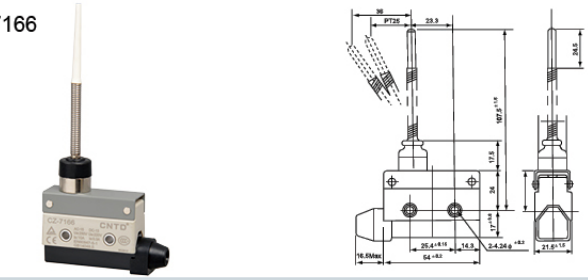

CMV10 小型微动开关 Miniature Snap Action Switch

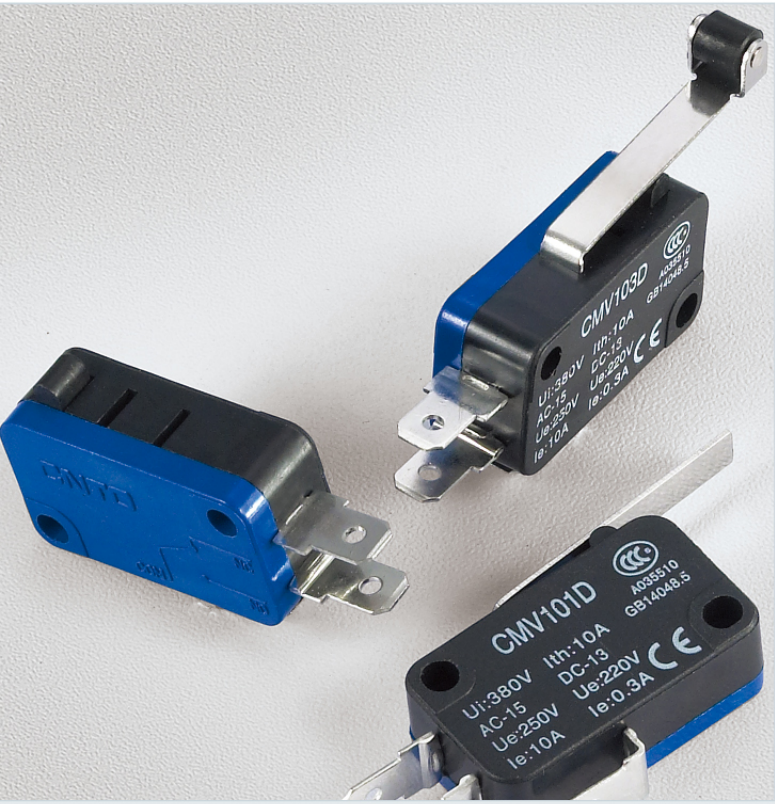

额定值 Ratings

项目 Item / 规格 Spec.	额定电压 Rated Voltage	非电感性负载 Noninductive Load (A)				电感性负载 Inductive Load (A)				突入电流 (A) Inarush Current	
		电阻性负载 Resistance Load		灯泡负载 Lamp Load		电感性负载 Inductive Load		马达负载 Motor Load			
		NC	NO	NC	NO	NC	NO	NC	NO	NC	NO
10A	250VAC	10		1.5		6		2		24 以下 max.	
	8VDC	10		3		6		3			
	30VDC	6		3		6		3			
	125VDC	0.3		0.1		0.6		0.1			
	250VDC	0.3		0.05		0.3		0.05			

规格 Specifications

项目 Item / 型式 Type		CMV 10 型 CMV 10 type
操作速度 Operation speed		0.05mm~1m/s(按钮型 Button type)
动作频率 Operating frequency		电气 Electrical: 20 operations/min
绝缘电阻 Insulation resistance		100MΩ 以上 (在 500VDC 以下) 100mΩ above(at 500VDC)
接点电阻 Contact resistance		15mΩ 以下 (初期) 15mΩ max. (initial value)
耐电压 Withstand voltage	非连续端子间 Non-continuous terminals	1,000VAC, 50/60Hz 持续 1 分钟 1000VAC, 50/60 Hz for 1 minute
	载电流和无载电流零件间，端子和接地之间 current-carrying and non-current-carrying metal parts, Between terminal and earthing	1,500VAC, 50/60Hz 持续 1 分钟 1500VAC, 50/60 Hz for 1 minute
振动 Vibration	误动作 Misoperation	10 至 55Hz, 1.5mm 双振幅 10 to 55Hz,1.5mm pairs swing
冲击 Shock	耐久 Durable	最大 1,000m/S²(约 100G) Maximum 1000 m/S² (100G)
	误动作 Misoperation	最大 200m/S²(约 100G) Maximum 200 m/S² (100G)
寿命 Life	电气的 Electrical	30 万次以上 More than 300000 times
使用周围温度 Temperature		使用时 :-20~+70℃ (没有结冰) Using: -20~+70℃ (With no icing)
使用周围湿度 Humidity		85%RH 以下 (+5~+35℃)Below 85% RH

型号说明 Model Number Structure

CMV [10] [0] [D]
① ② ③

项目 Item	代号 Code	说明 Description
① 额定电流 Rated Current	10	10A
②头部及传动杆 Head and driving rod	0	按钮型 Button type
	1	长柄型 Long handle type
	2	短柄型 Short shank type
	3	长滑轮型 Long pulley type
	4	短滑轮型 Short pulley type
	5	加长柄型 Longer handle type
	6	曲柄型 Crank type
③端子规格 Terminal specifications	C	#250 型端子 #250 terminal
	D	#187 型端子 #187 terminal

动作特性 Operating Characteristics

型式 Models	CMV100D	CMV101D	CMV102D	CMV103D	CMV104D	CMV105D	CMV106D
OF 最大 (Max.)	2.4N	1.23N	2.4N	1.23N	2.7N	0.69N	1.2N
RF 最小 (Min.)	0.49N	0.14N	0.49N	0.14N	0.49N	0.06N	0.14N
PT 最大 (Max.)	1.2mm	4.0mm	1.6mm	4.0mm	1.5mm	9.0mm	4.0mm
OT 最小 (Min.)	1.0mm	1.6mm	0.8mm	1.6mm	0.8mm	2.0mm	1.5mm
MD 最大 (Max.)	0.4mm	1.5mm	0.6mm	1.5mm	0.6mm	2.8mm	1.5mm
OP(mm.)	14.7±0.4mm	15.2±1.2mm	15.2±0.5mm	20.7±1.2mm	20.7±0.6mm	15.2±3mm	18.7±1.2mm

外观和尺寸 Appearance and Dimension

CMV100D

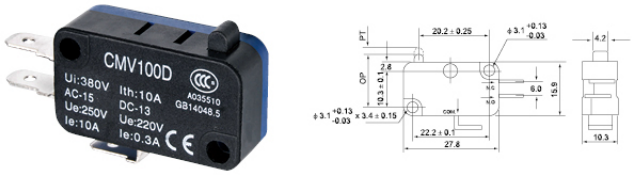

CMV100C

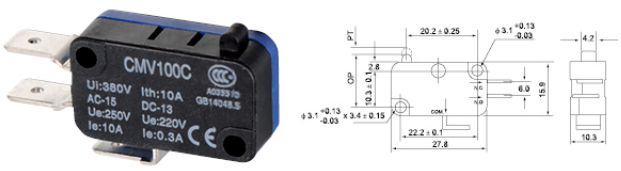

CMV101D

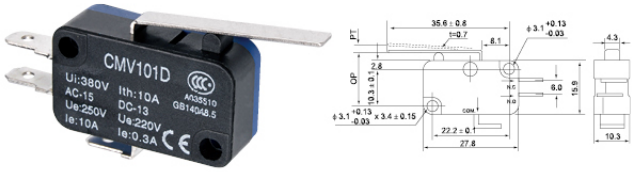

CMV101C

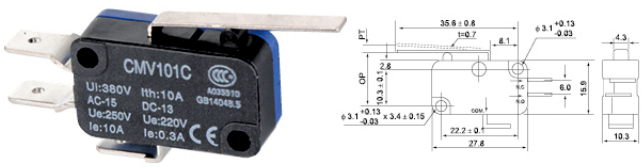

外观和尺寸 Appearance and Dimension

CMV102D

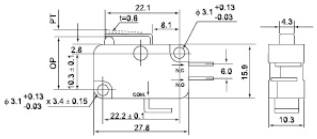

CMV102C

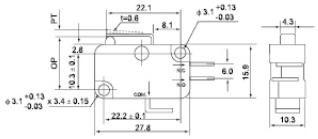

CMV103D

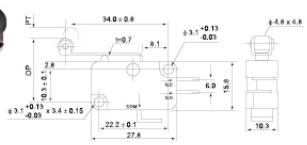

可选配金属滚轮
Optional Metal idler wheel

CMV103C

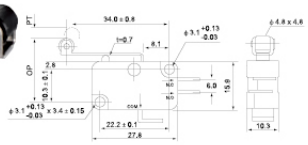

可选配金属滚轮
Optional Metal idler wheel

CMV104D

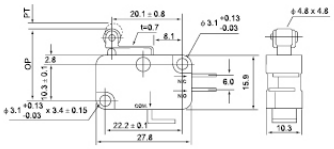

可选配金属滚轮
Optional Metal idler wheel

CMV104C

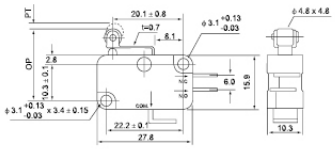

可选配金属滚轮
Optional Metal idler wheel

CMV105D

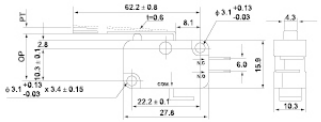

CMV105C

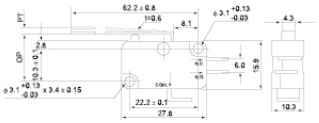

CMV106D

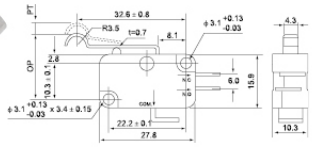

CMV106C

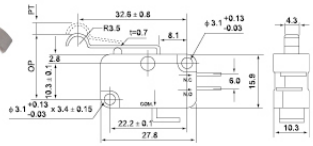

CMVP10-D

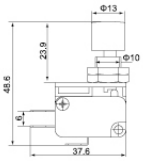

CMVP10-C

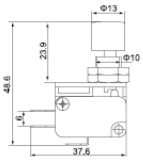

CMV16 小型微动开关 Miniature Snap Action Switch

额定值 Ratings

项目 Item / 规格 Spec.	额定电压 Rated Voltage	非电感性负载 Noninductive Load (A)				电感性负载 Inductive Load (A)				突入电流 (A) Inrush Current	
		电阻性负载 Resistance Load		灯泡负载 Lamp Load		电感性负载 Inductive Load		马达负载 Motor Load			
		NC	NO	NC	NO	NC	NO	NC	NO	NC	NO
16A	250VAC	16		2		10		3		40 以下 max.	
	8VDC	16		4		10		6			
	30VDC	10		4		10		4			
	125VDC	0.6		0.1		0.6		0.1			
	250VDC	0.3		0.05		0.3		0.05			

规格 Specifications

项目 Item / 型式 Type		CMV 16 型 CMV 16 type
操作速度 Operation speed		0.05mm~1m/s(按钮型 Button type)
动作频率 Operating frequency		电气 Electrical: 20 operations/min
绝缘电阻 Insulation resistance		100MΩ 以上 (在 500VDC 以下) 100mΩ above(at 500VDC)
接点电阻 Contact resistance		15mΩ 以下 (初期) 15mΩ max. (initial value)
耐电压 Withstand voltage	非连续端子间 Non-continuous terminals	1,000VAC, 50/60Hz 持续 1 分钟 1000VAC, 50/60 Hz for 1 minute
	载电流和无载电流零件间，端子和接地之间 current-carrying and non-current-carrying metal parts, Between terminal and earthing	2,000VAC, 50/60Hz 持续 1 分钟 2000VAC, 50/60 Hz for 1 minute
振动 Vibration	误动作 Misoperation	10 至 55Hz, 1.5mm 双振幅 10 to 55Hz,1.5mm pairs swing
冲击 Shock	耐久 Durable	最大 1,000m/S²(约 100G) Maximum 1000 m/S² (100G)
	误动作 Misoperation	最大 200m/S²(约 100G) Maximum 200 m/S² (100G)
寿命 Life	电气的 Electrical	30 万次以上 More than 300000 times
使用周围温度 Temperature		使用时 :-20~+70℃ (没有结冰) Using: -20~+70℃ (With no icing)
使用周围湿度 Humidity		85%RH 以下 (+5~+35℃)Below 85% RH

型号说明 Model Number Structure

CMV 16 0 0 1 C 2

① ② ③ ④

项目 Item	代号 Code	说明 Description
① 额定电流 Rated Current	16	16A
②头部及传动杆 Head and driving rod	00 01 02 03 04 05 06	按钮型 Button type 长柄型 Long handle type 短柄型 Short shank type 长滑轮型 Long pulley type 短滑轮型 Short pulley type 加长柄型 Longer handle type 曲柄型 Crank type
③触点形式 Contact form	1 2 3	一常开 一常闭触点 1NO/1NC 一常闭触点 1NC 一常开触点 1NO
③端子规格 Terminal specifications	C C2	#250 型端子 #250 terminal #187 型端子 #187 terminal

动作特性 Operating Characteristics

型号	Model	CMV16	CMV16001C2	CMV16011C2	CMV16021C	CMV16031C2	CMV16041C2	CMV16051C2	CMV16061C
操作力	Operating force	PT 最大 (Max.)	2.4N	1.23N	2.4N	1.23N	2.7N	0.69N	1.2N
回弹力	Release force	RF 最小 (Min.)	0.49N	0.14N	0.49N	0.14N	0.49N	0.06N	0.14N
预行程	Pre-travel	PT 最大 (Max.)	1.2mm	4.0mm	1.6mm	4.0mm	1.5mm	9.0mm	4.0mm
过行程	Over travel	OT 最小 (Min.)	1.0mm	1.6mm	0.8mm	1.6mm	0.8mm	2.0mm	1.5mm
行程移动分辨率	Movement differential	MD 最大 (Max.)	0.4mm	1.5mm	0.6mm	1.5mm	0.6mm	2.8mm	1.5mm
动作位置	Operating position	OP(mm.)	14.7 ± 0.4mm	15.2 ± 1.2mm	15.2 ± 0.5mm	20.7 ± 1.2mm	20.7 ± 0.6mm	15.2 ± 3mm	18.7 ± 1.2mm

外观和尺寸 Appearance and Dimension

CMV16001C2

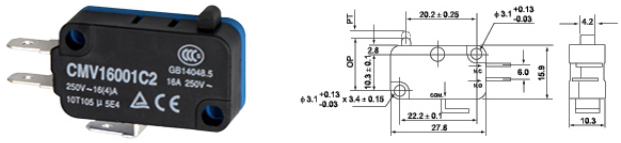

CMV16001C

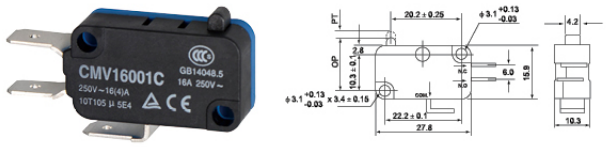

外观和尺寸 Appearance and Dimension

CMV16011C2

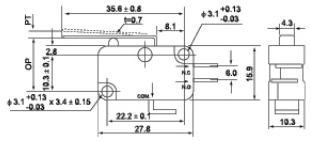

CMV16011C

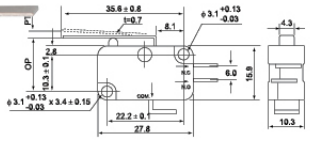

CMV16021C

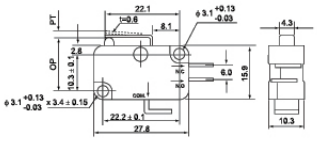

CMV16021C2

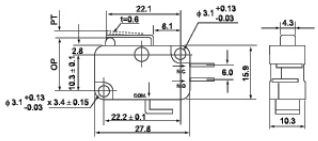

CMV16031C2

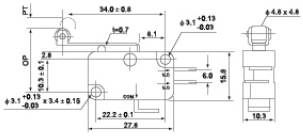

可定制金属滚轮
Custom Made Metal idler wheel

CMV16031C

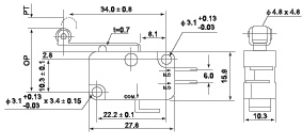

可定制金属滚轮
Custom Made Metal idler wheel

CMV16041C2

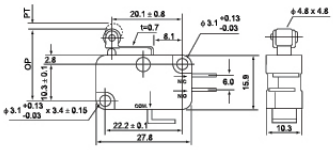

可定制金属滚轮
Custom Made Metal idler wheel

CMV16041C

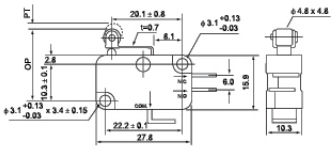

可定制金属滚轮
Custom Made Metal idler wheel

CMV16051C2

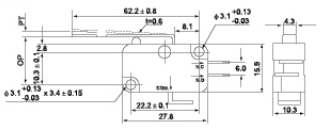

CMV16051C

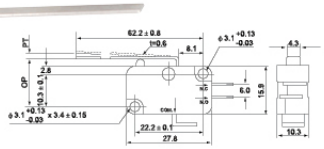

CMV16061C

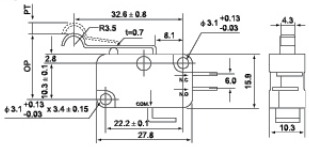

CMV16061C2

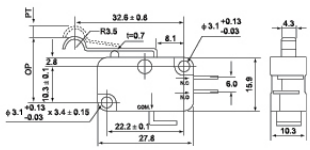

CFS 脚踏开关 Foot Switch

特点 Features

- 塑料外壳与金属外壳可供选择
- Plastic shell and metal shell are for selection

接点型式 Contact Form

规格 Specifications

种类 Designation	型式 Model	负荷 Rating	微动开关形式 Type of switch enclosed & contact arrangement	电缆种类 / 长度 Cable type / length	接点 Cantact	动作压力 Action force	外壳材质 Material of Rind
标准型 复归式 Standard type Momentary Action	CFS-101	10A 250VAC	CMV-100D	0.75mm²,3C/0.5 meter(米),1 meter(米)~3 meter(米)	1A1B	1.2kg	塑胶 Plastic
	CFS-102	15A 250VAC	CM-1704	0.75mm²,3C/1 meter(米),1.5 meter(米)~2 meter(米)	1A1B	1.1kg	
	CFS-2	10A 250VAC	CMV-100D	0.5mm²,3C/1 meter(米)~3 meter(米)	1A1B	1.1kg	铝合金 Aluminum Cast
	CFS-3	10A 250VAC	CMV-100D	0.75mm²,3C/0.5 meter(米),1 meter(米)~3 meter(米)	1A1B	1.2kg	
	CFS-3S	15A 250VAC	CM-1704	0.75mm²,3C/1 meter(米),1 meter(米)~3 meter(米)	1A1B	1.1kg	
交替式 Alternate action	CFS-105	6A 250VAC	CMVS-D	0.75mm²,3C/1 meter(米),1 meter(米)~2 meter(米)	1A1B	2kg	塑胶 Plastic
	CFS-305	6A 250VAC	CMVS-D	附电缆固定头，不附电缆 Accessory: Cable gland (No cable)		3.1kg	铝合金 Aluminum Cast
	CFS-405	6A 250VAC	CMVS-D			3.1kg	
	CFS-505	6A 250VAC	CMVS-D			3.1kg	
小型附 回定片 Mini foot switch Front end push	CFS-201	10A 250VAC	CMV-100D	0.5mm²,3C/1 meter(米)~3 meter(米)	1A1B	0.7kg	塑胶 Plastic
	CFS-01	10A 250VAC	CMV-100D	0.5mm²,3C/1 meter(米)~3 meter(米)	1A1B	0.7kg	
	CFS-1	10A 250VAC	CMV-100D	0.5mm²,3C/1 meter(米)~3 meter(米)	1A1B	0.9kg	铁壳 Iron
护盖型 Protective guard foot switch	CFS-302	15A 250VAC	CM-1704	附电缆固定头，不附电缆 Accessory: Cable gland (No cable)	1A1B	3.2kg	铝合金 Aluminum Cast
	CFS-304	15A 250VAC	CM-1704 * 2		2A2B	3.2kg	
	CFS-502	15A250VAC	CM-1704		1A1B	3.2kg	
	CFS-504	15A250VAC	CM-1704 * 2		2A2B	3.2kg	
	CFS-602	15A250VAC	按钮弹簧式 Button spring type		2*1A1B	2.8kg	
	CFS-702	15A250VAC	CM-1704		2*1A1B	3.2kg	
大型 Large type	CFS-402	15A250VAC	CM-1704		1A1B	3.2kg	
	CFS-404	15A 250VAC	CM-1704 * 2		2A2B	3.2kg	
	CFS-802	15A 250VAC	CM-1704		2*1A1B	3.2kg	

注：导管连接器尺寸常规默认为 M20x1.5，配电缆接头；导管连接器尺寸 PG13.5，型号加 (-P)，例：CFS-302-P。

NOTE: The default size of conduit connector is M20x1.5, outfiting cable connector. Conduit connector size is PG13.5, with product model number plus (-P), example:CFS-302-P.

外观和尺寸 Appearance and Dimension

CFS-201

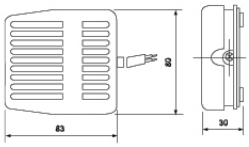

CFS-01

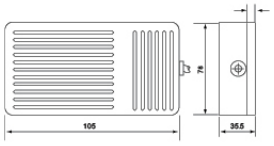

CFS-101
CFS-102
CFS-105

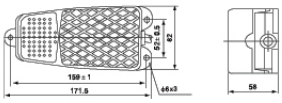

CFS-1

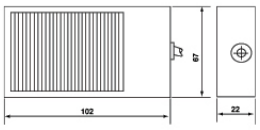

CFS-2

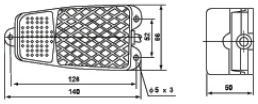

CFS-3
CFS- 3S

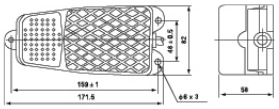

CFS-302
CFS-304
CFS-305

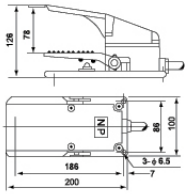

CFS-402
CFS-404
CFS-405

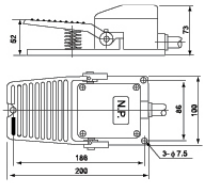

CFS-502
CFS-504
CFS-505

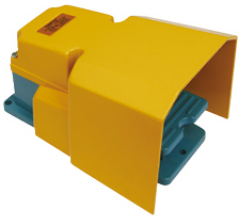

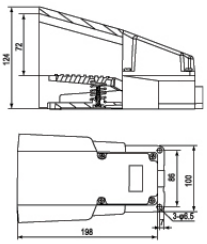

CFS-602

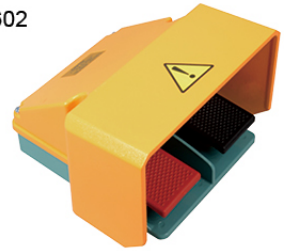

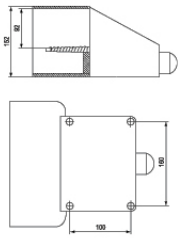

CFS-702

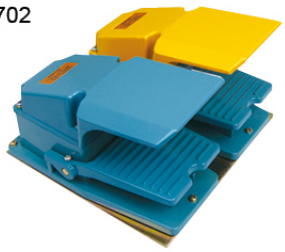

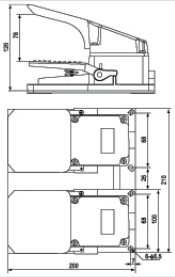

CFS-802

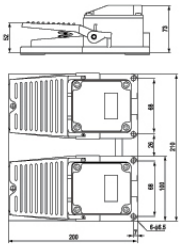

CB 动力押扣开关
Power Pushbutton Switch

特点 Features

- 塑料外壳与金属外壳可供选择
- Plastic shell and metal shell are for selection

规格 Specifications

型式 Model	规格 Spec.	安装型式 Mounting type	接线端子 Connection terminal	外壳材质 Material
CBSN-310	3 ϕ 10A 1.5KW	露出型 Surface mounting	M3.5	铁烤漆 Iron
CBSN-315	3 ϕ 15A 2.2KW		M4	
CBSN-330	3 ϕ 30A 3.7KW		M5	
CBSP-315	3 ϕ 15A 2.2KW	露出型 Surface mounting	M4	强化塑胶 Plastic
CBSP-330	3 ϕ 30A 3.7KW			
CBSY-315	3 ϕ 15A 2.2KW	埋入型 Flush mounting	M4	铁烤漆 Iron
CBSY-330	3 ϕ 30A 3.7KW			
CBSS-315	3 ϕ 15A 2.2KW	埋入型 Flush mounting	M3.5	铁烤漆 Iron
CBSS-330	3 ϕ 30A 3.7KW		M4	
CPB-2	3A 250VAC	露出型 Surface mounting	M4	强化塑胶 Plastic
CPB-3	3A 250VAC			

外观和尺寸 Appearance and Dimension

CBSN-310

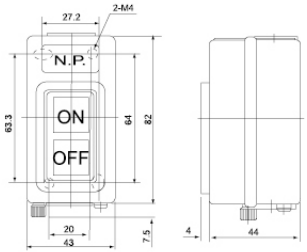

CBSN-315

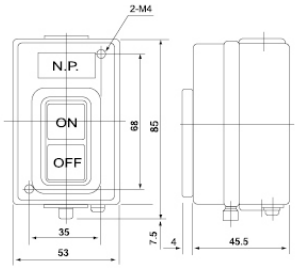

CBSN-330

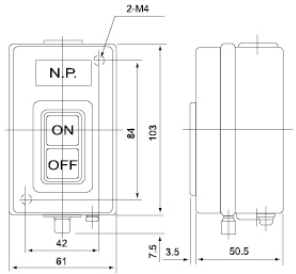

CNTD® 昌得电气

外观和尺寸 Appearance and Dimension

CBSP-315

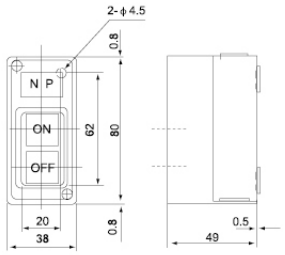

CBSP-330

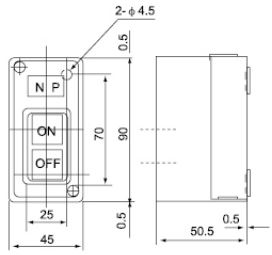

CBSY-315
CBSY-330

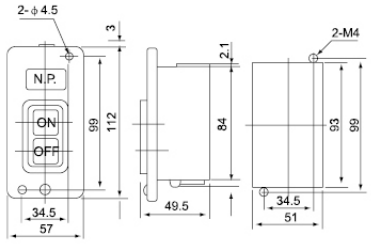

CBSS-315
CBSS-330

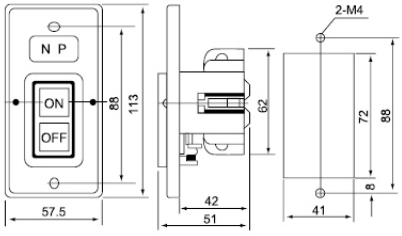

CPB-2

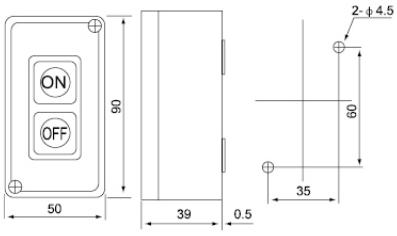

CPB-3

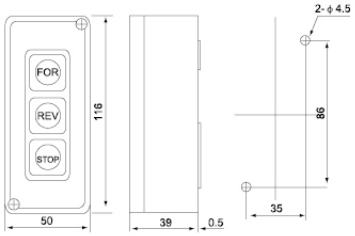

C5 钮子开关 Toggle Switch

特点 Features

- 电流分 10A 及 15A
- 切换方式有固定式及复位式 (单投及双投皆可复归)
- 接线端子有螺丝端子及焊接端子 (亦可用快速端子)
- 防水套可防水、防油，适用于全系列
- 固定孔径 : ϕ 12mm

- 10A type and 15A type for selection
- Fixed type and auto-return type (both single-throw and double-throw) for selection
- Screw terminal, solder terminal and tab terminal for selection
- Water-proof cap for water-proof and oil-proof
- Mounting hole: ϕ 12mm

型号说明 Model Number Structure

C5	11	B
①	②	③

项目 Items	代号 Code	说明 Description
①型式 Type	CO	10A 250VAC 自锁 Self-locking
	COR	10A 250VAC 自动复位 Spring return
	C5	15A 250VAC 自锁 Self-locking
	C5R	15A 250VAC 自动复位 Spring return
②接点 Contact	11	单极单投 Single pole single throw ON-OFF
	12	单极双投 Single pole double throw ON-ON
	13	单极双投 (中间 OFF) Single pole double throw (central OFF)ON-OFF-ON
	131	单极双投 (中间 OFF 单边复位) Single pole double throw (central OFF single return)ON-OFF-ON
	21	双极单投 Double pole single throw ON-OFF
	22	双极双投 Double pole double throw ON-ON
	23	双极双投 (中间 OFF) Double pole double throw (central OFF)ON-OFF-ON
	231	双极双投 (中间 OFF 单边复位) Double pole double throw (central OFF single return)ON-OFF-ON
③端子 Terminal	A	快速端子 Tab terminal(#250)
	B	螺丝端子 Screw terminal
	C	焊接端子 Solder terminal(#187)

规格 Specifications

接触电阻 Contact resistance	15MΩ 以下 (初期值)max. (initial)
绝缘电阻 Insulation resistance	100MΩ 以上 above(在 500VDC 下)under 500VDC
电介强度 Dielectric strength	2000VAC，50/60Hz 持续 1 分钟 For 1minute
振动 Vibration	10 至 55Hz，1.5mm 双振幅 double amplitude
周围温度 Ambien temperature	使用时 :-20~+70℃ (没有结冰) Using: -20~+70℃ (With no icing)
湿度 Humidity	85% 以下 85% RH max.
电气寿命 Electrical life	500,000 次以上 500,000 operations above

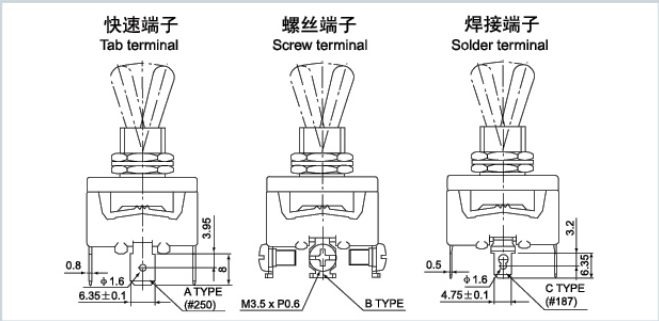

COW 防水套 Rainproof cap (Tow)

额定值 Ratings

负载 Load	型式 Type	AC 负载 Rating	DC 负载 Rating
电阻性负载 Resistance Load	CO	10A 250V 15A 125V	0.4A 250V 0.8A 125V
	C5	15A 250V 20A 125V	0.5A 250V 0.9A 125V
电感性负载 Inductive Load	CO	10A 250V 15A 250V	0.2A 250V 0.4A 125V
	C5	15A 250V 20A 125V	0.3A 250V 0.5A 125V 15A
灯泡负载 Lamp Load	CO	300W 100V 500W 200V	30V
	C5	400W 125V 800W 250V	-
马达负载 Motor Load	CO	200W 125V 300W 250V	7A 30V
	C5	400W 125V(single phase)	
	CO	550W 250V(three phase)	-
	C5	750W 250V(three phase)	

CNTD® 昌得电气

外观和尺寸 Appearance and Dimension

C511B
C5R11B

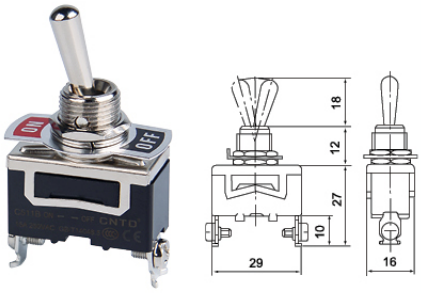

C512B
C5R12B

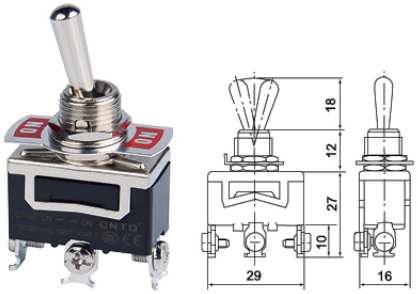

C513B
C5R13B

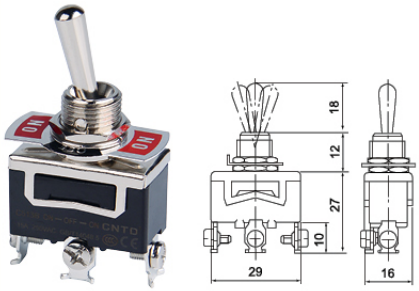

C521B
C5R21B

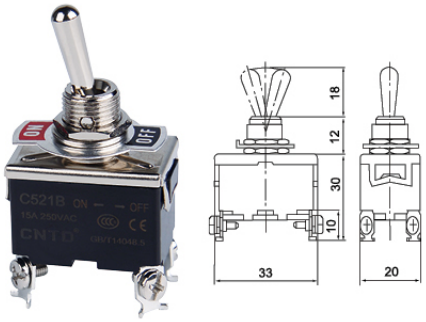

C522B
C5R22B

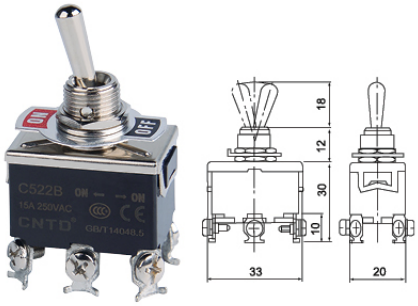

C523B
C5R23B

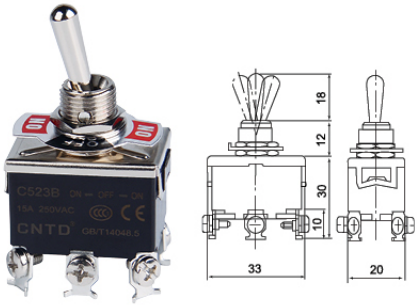

C511A
C5R11A

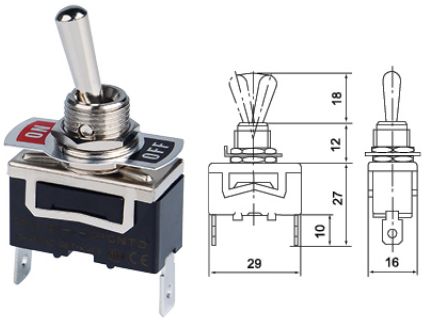

C512A
C5R12A

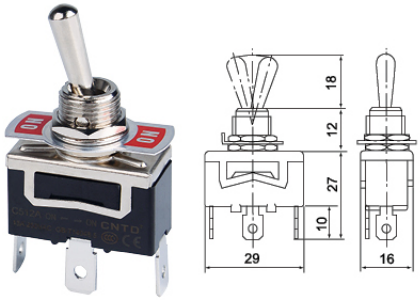

C513A
C5R13A

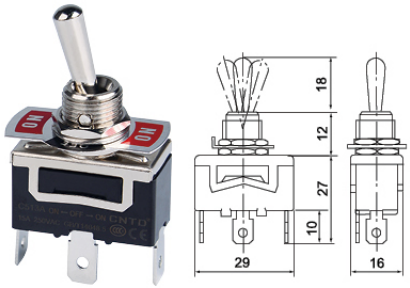

C521A
C5R21A

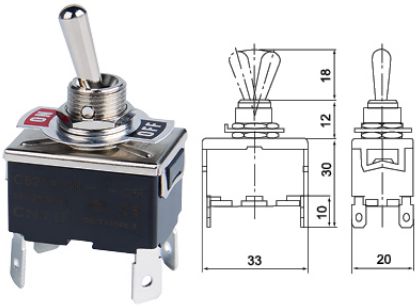

C522A
C5R22A

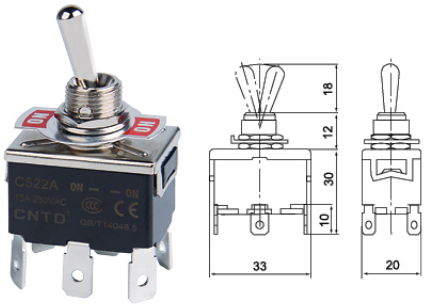

C523A
C5R23A

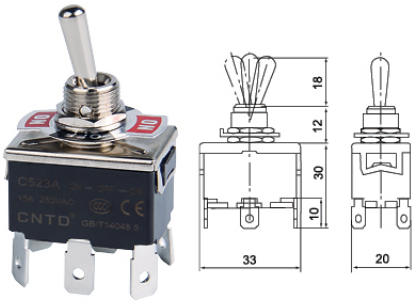

CMR 十字开关 Monolever Switch

特点 Features

- 上、下、左、右四方向操作顺畅，具可任意选择一向、二向、三向、或四向
- 有保持、复位、无动作等三种操作方式
- 接点座有 2a(BR-1),1a1b(BR-2),2b(BE-3)。如下图可自由选择方向与接点之组合
- 具耐油、防水和防压结构

- Smoothly and swiftly handle the lever in four directions upward, rightward, downward, and leftward
- Three alternatives of movement are attainable in each direction: Go-on, auto-return, and blockade-enforcing
- Operate in four, three, or two directions with the switch
- Rubber bushing is water-proof, oil-resistant, and dustpreventive

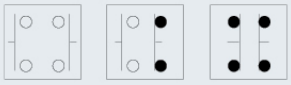

BR-1 BR-2 BR-3

型号说明 Model Number Structure

CMR – 30 2 – 2 2 2 2 10 10 10 10

① ② ③ ④ ⑤

项目 Items	代号 Code	说明 Description
① 型式 Type	CMR	圆型 Round type
	CMS	方型 Square type
	CMRS	圆型 Round type
	CMRN	密封圆型 Seal Round
② 固定孔径 Mounting Hole	30	Φ30m/m only
③ 接点座数目 No.of contact Blocks fitted	1~4	1~4
④ 操作方式 Actuating keys	1	保持 Go-on
	2	复位 Auto-return
	0	无动作 Blockade-enforcing
⑤ 接点排列型式 Type of contact Blocks fitted	00	None
	10	1a(1NO)
	20	2a(2NO)
	01	1b(1NC)
	02	2b(2NC)
	11	1a1b(1NO-1NC)

Note: When you place order, please kindly designate clockwise the movement way and type of contact fitted.

额定值 Ratings

交流 AC	额定电压 Rated voltage		110V	220V	440V
	额定电流 Rated current		10A	6A	3A
	开断电流 Breaking current capacity		50A	30A	10A
直流 DC	电阻性负载 Resistance Load	额定电压 Rated voltage	110V	220V	600V
		额定电流 Rated Current	2.2A	1.1A	0.4A
		开断电流 Breaking Current	2.42A	1.21A	0.44A
	电感性负载 Inductive Load	额定电流 Rated Current	1.2A	0.45A	0.2A
		开断电流 Breaking Current	1.32A	0.5A	0.22A

外观和尺寸 Appearance and Dimension

CMR-301

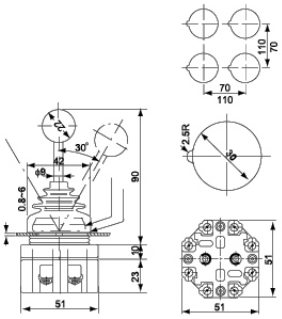

CMRN-301

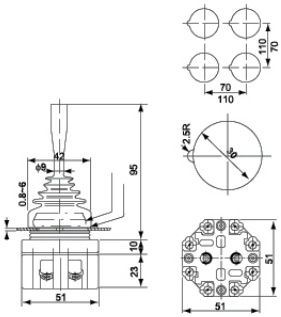

CMR-302

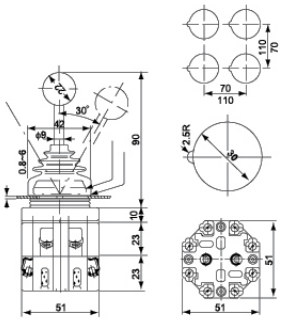

CMRN-302

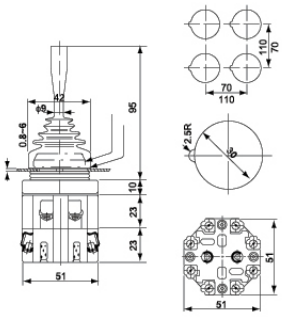

CMRS-304

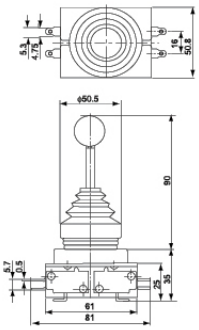

CMRSN-304

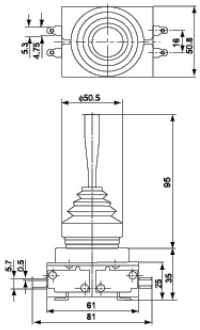

C2、C3 按钮开关 Pushbutton Switch

型号说明 Model Number Structure

C2 - SIS - F2 / 1A - R - 220

① ② ③ ④ ⑤ ⑥

①固定孔径：C2=22 ϕ Round、C3=30 ϕ Round

②型式：

SNS= 短柄旋钮、SNL= 长柄旋钮

SNK= 钥匙旋钮、PNF= 平头按钮、PNH= 凸头按钮

PNM3=30mm 大头按钮、PNM4=40mm 大头按钮

PNM6=60mm 大头按钮、PNR3=30mm 急停按钮

PNR4=40mm 大头按钮、PNR6=60mm 急停按钮、

PNKM4= 急停钥匙旋钮、PND= 双位带灯按钮

PNP= 拉伸开关、PIF= 平头带灯按钮

PIH= 凸头带灯按钮、PIM4= 大头带灯按钮

PID= 双位按钮、SIS= 短柄带灯旋钮

SIL= 长柄带灯旋钮、LIF= 标准型指示灯

LUF= 圆型指示灯、MN= 十字开关

③操作型式：按钮开关 空白 = 自复位、D= 自锁式

旋钮开关、十字开关：F2=2 向自锁、F3=3 向自锁、

F4=4 向自锁、T2=2 向复位、T3=3 向复位、T4=4 向复位

④接点：1A=1NO、1B=1NC、1C=1A1B、1D=1A+1B

2A=2NO、2B=2NC、2C=1A1B+1A1B

⑤头部颜色：R= 红、G= 绿、Y= 黄、W= 白、B= 黑、BL= 蓝

⑥带灯电压 :12=12VDC、24=24VDC、36=36VDC、48=48VDC

110=110VAC、220=220VAC、380=380VAC

① Fixed hole diameter: 2=22 ϕ Round、3=30 ϕ Round

② Types:

SNS=Short handle knob、 SNL=Long handle knob

SNK=key knob、PNF=flat head、PNH=convex head

PNM3=30mm big head 、PNM4=40mm big head

PNM6=60mm big head 、PNR3=30mm Emergency stop head

PNR4=40mm big head、PNR6=60mm Emergency stop head、

PNKM4=Emergency stop knob、PND=Doulbe with lamp button

PNP=Tensile switch、PIF=Flat ribbon lamp button

PIH=Convex head with lamp button、PIM4=big head with lamp buttom、

PID= Double button、SIS=Short shank with lamp knob

SIS=Long handle with lamp knob、LIF=Standard type indicating lamp

LUF=circular type indicating lamp、MN=Monolever Switch

③ Operation type: Pushbutton Switch: Blank=Self-resetting、D=Self-locking Knob Switch、Monolever Switch: F2=2 to the self-locking、F3=3 to the self-locking、F4=4 to the self-locking、T2=2 to reset、T3=3 to reset、T4=4 to reset

④ Contact: 1A=1NO、1B=1NC、1C=1A1B、1D=1A+1B

2A=2NO、2B=2NC、2C=1A1B+1A1B

⑤ Head color: R=red、G=green、Y=yellow、W=white、B=black、BL=blue

⑥ With lamp voltage:12=12VDC、24=24VDC、36=36VDC、48=48VDC

110=110VAC、220=220VAC、380=380VAC

注：定制产品在以上选型不能解释清楚的，定货时请另外注明。

Note: Custom products over the selection can not explain clearly, please also specify when ordering.

规格 Specifications

电气容量 Electrical capacitor	最大绝缘电压 600VAC，最大热电流 10A Max insulation voltage600VAC, Max thermal current10A
操作类别 Operation	AC15 类：250VAC/6A，DC13 类：250VDC/0.6A AC15 Type: 250VAC/16A, DC13 Type: 250VDC/0.6A
触点导阻 Contact resistance	最大 50MΩ Max 50MΩ
绝缘强度 Insulation strength	2500VAC 50Hz，1 分钟 2500VAC 50Hz, 1 minute
绝缘阻抗 Insulation resistance	500VDC 下，大于 100MΩ 500VDC below, 100MΩ above
耐震阻值 Vibration resistance	10g @40-500Hz
用灯寿命 Life	白炽灯 1,000 小时，LED 灯 100,000 小时 Lamp 1,000hour，LED 1,000hour
电气寿命 Electrical life	开关片 AC15 250VAC/6A >1，000，000 Contact block AC15 250VAC/6A >1，000，000
	DC13 250VAC/0.6A >1，000，000 DC13 250VAC/0.6A >1，000，000
储存温度 Storage temperature	使用时 :-20~+70℃（没有结冰） Using: -20~+70℃（With no icing）
操作室温 Operation temperature	使用时 :-20~+70℃（没有结冰） Using: -20~+70℃（With no icing）

C2SNS

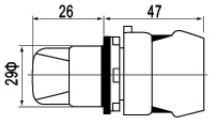

短柄旋钮
Short handle knob

C2SNL

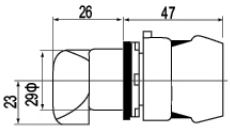

长柄旋钮
Long handle knob

C2SNK

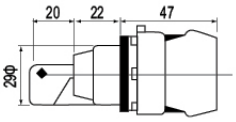

钥匙旋钮
Key knob

C2PNF

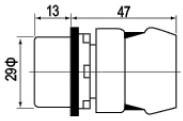

平头按钮
Flat button

C2PNH

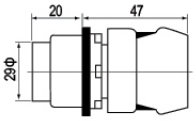

凸头按钮
Convex head button

C2PNM3

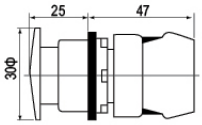

大头按钮
Big button

C2PNM4

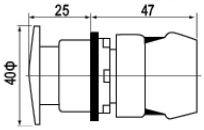

大头按钮
Big button

C2PNM6

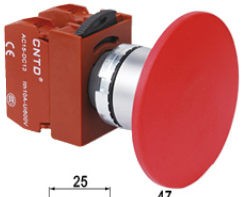

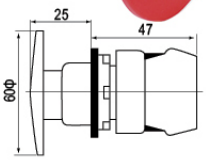

大头按钮
Big button

C2PNR3

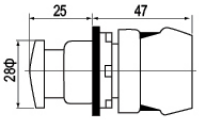

急停按钮
Emergency stop button

C2PNR4

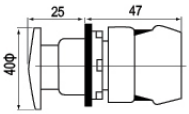

急停按钮
Emergency stop button

C2PNR6

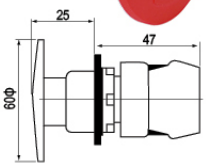

急停按钮
Emergency stop button

C2PNKM4

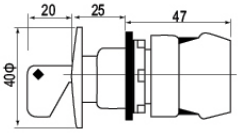

急停钥匙旋钮
Emergency stop key knob

C2PND

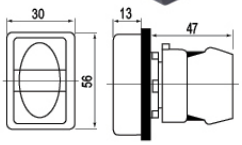

双位按钮
Double button

C2PNP

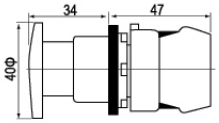

拉伸开关
Pulling switch

C2PIF

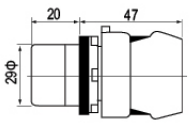

平头带灯按钮
Flat head with lamp button

C2PIH

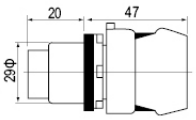

凸头带灯按钮
Convex head with lamp button

C2PIM4

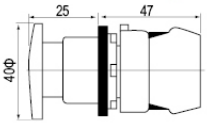

大头带灯按钮
Big head with lamp button

C2PID

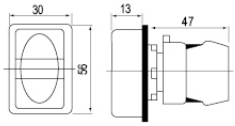

双位带灯按钮
Double push button with lamp

C2SIS

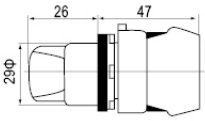

短柄带灯旋钮
Short shank with lamp knob

C2SIL

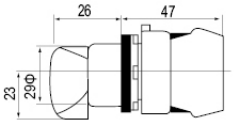

长柄带灯旋钮
Long handle with lamp knob

C2LIF

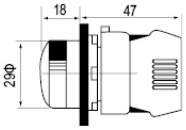

指示灯
Indicating lamp

C2LUF

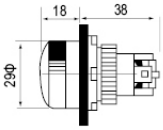

指示灯
Indicating lamp

C2MN-T2

十字开关双向复位
Monolever switch bidirectional reset

C2MN-F2

十字开关双向自锁
Monolever switch bidirectional self-locking

C2MN-T4

十字开关四向复位
Monolever switch four-directional reset

C2MN-F4

十字开关四向自锁
Monolever switch four-bidirectional self-locking

C3SNS

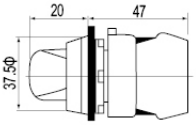

短柄旋钮
Short handle knob

C3SNL

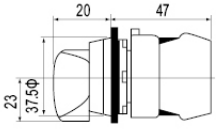

长柄旋钮
Long handle knob

C3SNK

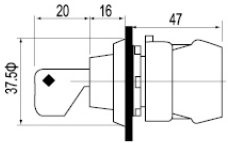

钥匙旋钮
Key knob

C3PNF

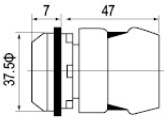

平头按钮
Flat button

C3PNH

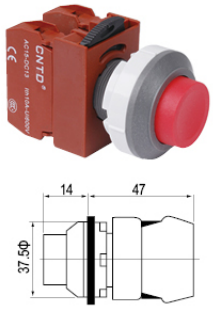

凸头按钮
Convex head button

C3PNM3

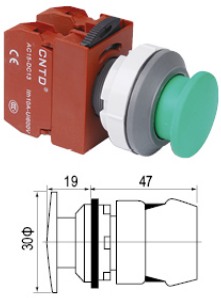

大头按钮
Big button

C3PNM4

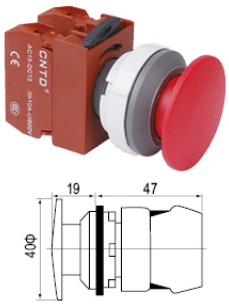

大头按钮
Big button

C3PNM6

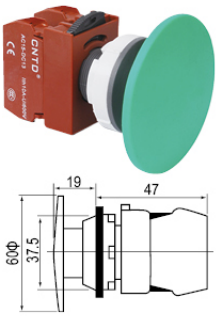

大头按钮
Big button

C3PNR3

急停按钮
Emergency stop button

C3PNR4

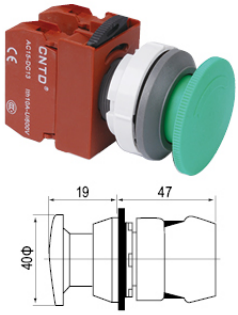

急停按钮
Emergency stop button

C3PNR6

急停按钮
Emergency stop button

C3PNKM4

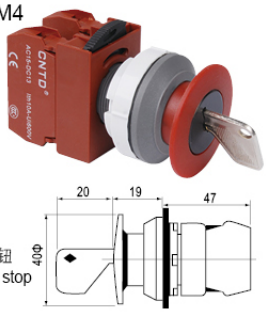

急停钥匙旋钮
Emergency stop key knob

C3PIF

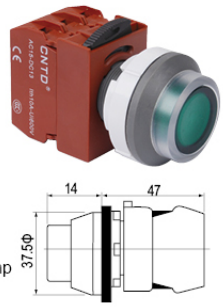

平头带灯按钮
Flat ribbon lamp button

C3PIH

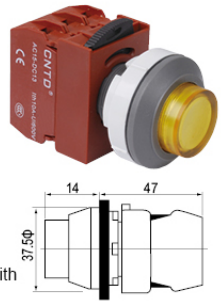

凸头带灯按钮
Convex head with lamp button

C3PIM4

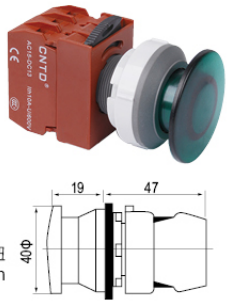

大头带灯按钮
Big head with lamp button

C3SIS

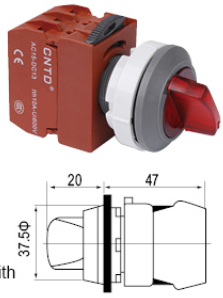

短柄带灯旋钮
Short shank with lamp knob

C3SIL

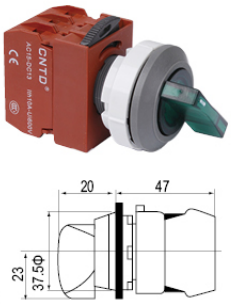

长柄带灯旋钮
Long handle with lamp knob

C3LIF

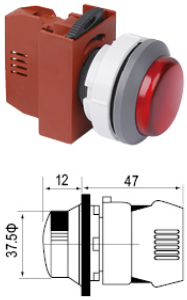

指示灯
Indicating lamp

C3LUF

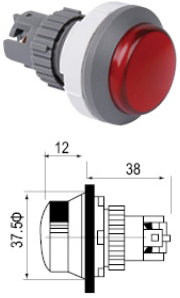

指示灯
Indicating lamp

C2、C3 按钮开关
Pushbutton Switch

接点组 Contact Blocks

C10VN

NO

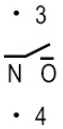

C01VN

NC

C20VN

NO+NO

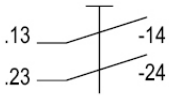

C11VN

NO+NC

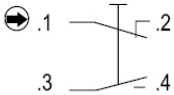

CPDNVS

CPDNVO

按钮附件 Push Button Accessories

22ϕ 控制盒
Control Box

型号说明 Model Number Structure

CBX [2] - [22]

① ②

① 1=1 孔、2=2 孔、3=3 孔、4=4 孔、5=5 孔
② 22=22ϕ 口径、30=30ϕ 口径

① 1=1Holes, 2=2Holes, 3=3Holes, 4=4Holes, 5=5Holes,
② 22=22ϕ Caliber, 30=30ϕ Caliber

外形尺寸 Appearance and Dimension

型号 Model	安装尺寸 Mounting Dimensions	外观尺寸 External Dimension
	长 (L) x 宽 (W)	长 (L) x 宽 (W) x 宽 (H)
CBX1	53 x 38 mm	70 x 65 x 63 mm
CBX2	88 x 38 mm	100 x 65 x 63 mm
CBX3	128 x 38 mm	140 x 65 x 63 mm
CBX4	167 x 38 mm	180 x 65 x 63 mm
CBX5	206 x 38 mm	220 x 65 x 63 mm

CK 小型功率继电器
Miniature General Purpose Relay

CNTD® 昌得电气

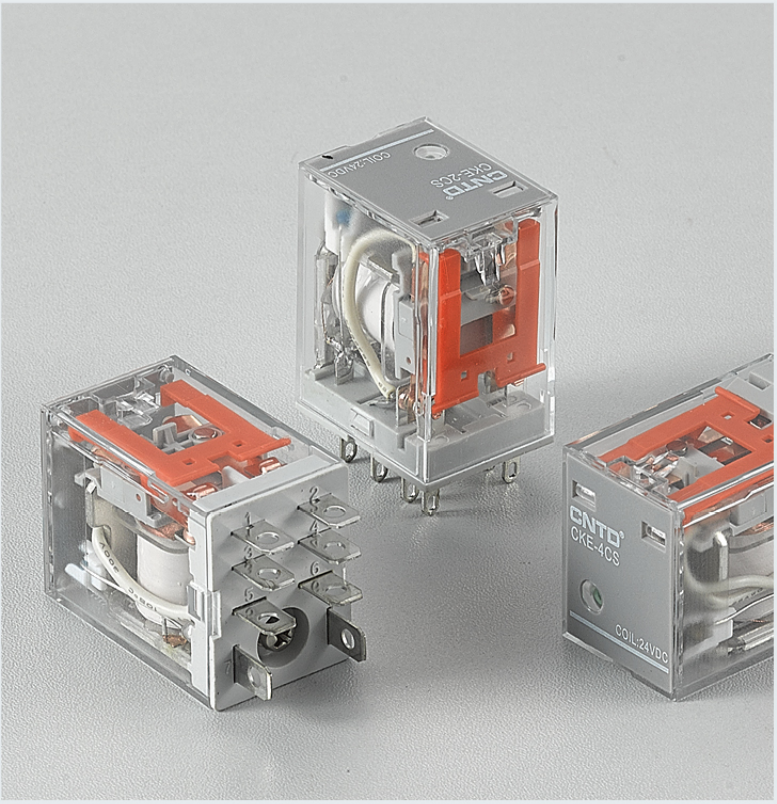

特点 Features

- 体积小，灵敏度高
- 触点负载大 2C: 5A/10A, 4C: 3A
- 多种规格，配有双向指示灯
- 带机械指示窗

- Small size and high sensitivity
- Large contact load 2C: 5A/10A, 4C: 3A
- Multiple specifications with two-way indicator
- With mechanical indicator window

型号说明 Model Number Structure

CK [E] — [2C] [S] [024] [ ]

① ② ③ ④ ⑤

① 电流形式 (阻性) Current form(Resistance)	E: 电流负载 3A、5A E: Current load 3A、5A
	L: 电流负载 10A L: Current load 10A
②触点形式 Contact form	2C: 2 组 Set
	4C: 4 组 Set
③ 接线方式 Mount options	S: 插入式; P: 焊接式 S: Plug-in type; P: Welded type
④电压 Voltage	参考线圈规格代号 Reference coil specification code
⑤选项 Options	无: 标准型; LT: LED+ 测试按钮; LTD: LED+ 测试按钮 + 二极管 No, standard type; LT: LED+Test button LTD: LED+Test button+Diode

规格 Specifications

型号 Model			CKE-2CS	CKE-4CS	CKL-2CS
触点 Contact	形式 Form		2C	4C	2C
	负载 (阻性) Load(Resistance)	阻性 Resistance	5A/250VAC 30VDC	3A/250VAC 30VDC	10A/250VAC 30VDC
		马达 Motor	1/6HP 240VAC	1/6HP 240VAC	1/3HP 240VAC
	切换功率 (阻性) Switching power (Resistance)		1750VA, 210W	750VA, 90W	2500VA, 300W
	接触电阻 (初始) Initial contact (resistance)		50m	≤ 100m	≤ 100m
	材料 Material		银合金 Ag alloy	银合金 Ag alloy	银合金 Ag alloy
	电气寿命 (频率 1S 通、1S 断) Electrical life(1s ON/ 1s OFF)		≥ 10^5 次 (1800 操作次数 / 小时) ≥ 10^5 次 (1800 Ops/h)	≥ 10^5 次 (1800 操作次数 / 小时) ≥ 10^5 次 (1800 Ops/h)	≥ 10^5 次 (1800 操作次数 / 小时) ≥ 10^5 次 (1800 Ops/h)
	机械寿命 (频率 300 次 /1 分钟) Mechanical life(300 times / 1 min)		≥ 10^7 次 (18000 操作次数 / 小时) ≥ 10^7 次 (18000 Ops/h)	≥ 10^7 次 (18000 操作次数 / 小时) ≥ 10^7 次 (18000 Ops/h)	≥ 10^7 次 (18000 操作次数 / 小时) ≥ 10^7 次 (18000 Ops/h)
吸合电压 (23℃) Pick-up voltage (23℃)			DC: ≥ 75% (额定电压), AC: ≥ 80% (额定电压) DC: 75% (Rated voltage), AC: 80% (Rated voltage)	DC: ≥ 75% (额定电压), AC: ≥ 80% (额定电压) DC: 75% (Rated voltage), AC: 80% (Rated voltage)	DC: ≥ 75% (额定电压), AC: ≥ 80% (额定电压) DC: 75% (Rated voltage), AC: 80% (Rated voltage)
释放电压 (23℃) Drop-out voltage (23℃)			DC: ≥ 10% (额定电压), AC: ≥ 30% (额定电压) DC: 10% (Rated voltage), AC: 30% (Rated voltage)	DC: ≥ 10% (额定电压), AC: ≥ 30% (额定电压) DC: 10% (Rated voltage), AC: 30% (Rated voltage)	DC: ≥ 10% (额定电压), AC: ≥ 30% (额定电压) DC: 10% (Rated voltage), AC: 30% (Rated voltage)
最大电压 (23℃) Maximum voltage (23℃)			110% (额定电压) 110% (Rated voltage)	110% (额定电压) 110% (Rated voltage)	110% (额定电压) 110% (Rated voltage)
绝缘电阻 Insulation resistance			≥ 500M (500VDC)	≥ 500M (500VDC)	≥ 500M (500VDC)
线圈功率 Coil operating power	DC(W)		约 0.9 Approx. 0.9	约 0.9 Approx. 0.9	约 0.9 Approx. 0.9
	AC(VA)		约 1.2 Approx. 1.2	约 1.2 Approx. 1.2	约 1.2 Approx. 1.2
吸合时间 (额定电压) Operate time (at nominal voltage)			≤ 20 ms	≤ 20 ms	≤ 20 ms
释放时间 (额定电压) Release time (at nominal voltage)			≤ 20 ms	≤ 20 ms	≤ 20 ms
初始耐压 Initial breakdown voltage	同极触点之间 Between open contacts		1000VAC/1min（漏电流 1mA) 1000VAC/1min (leakage current 1mA)	1000VAC/1min（漏电流 1mA) 1000VAC/1min (leakage current 1mA)	1000VAC/1min（漏电流 1mA) 1000VAC/1min (leakage current 1mA)
	异极触点之间 Between poles		1000VAC/1min（漏电流 1mA) 1000VAC/1min (leakage current 1mA)	1000VAC/1min（漏电流 1mA) 1000VAC/1min (leakage current 1mA)	1500VAC/1min（漏电流 1mA) 1500VAC/1min (leakage current 1mA)
	触点与线圈间 Between contacts and coil		1500VAC/1min（漏电流 1mA) 1500VAC/1min (leakage current 1mA)	1500VAC/1min（漏电流 1mA) 1500VAC/1min (leakage current 1mA)	1500VAC/1min（漏电流 1mA) 1500VAC/1min (leakage current 1mA)
环境温度 Ambient temperature			-25~+55℃	-25~+55℃	-25~+55℃
环境湿度 Humidity			35%~85%RH	35%~85%RH	35%~85%RH
大气压力 Air pressure			86~106KPa	86~106KPa	86~106KPa
耐冲击 Shock resistance			10G(正弦半波脉冲 : 11ms) 10G(sinusoidal half-wave pulse:11ms)	10G(正弦半波脉冲 : 11ms) 10G(sinusoidal half-wave pulse:11ms)	10G(正弦半波脉冲 : 11ms) 10G(sinusoidal half-wave pulse:11ms)
耐振动 Vibration resistance			10~55Hz 双振幅 : 1.0 mm 10~55Hz double-amplitude:1.0mm	10~55Hz 双振幅 : 1.0 mm 10~55Hz double-amplitude:1.0mm	10~55Hz 双振幅 : 1.0 mm 10~55Hz double-amplitude:1.0mm
安装方式 Mounting			插入式 plug in	插入式 plug in	插入式 plug in
重量 Unit weight			35g	40g	40g

线圈规格 (23℃) Coil Specifications (23℃)

型号 Model	CKE-2CS、CKE-4CS、CKL-2CS							
电压代号 (DC) Voltage code(DC)	006	009	012 *	024 *	036	048 *	110	220
额定电压 V.DC Nominal voltage V.DC	6	9	12	24	36	48	110	220
线圈电阻 Ω Coil resistance Ω	40	90	180	640	1500	2600	13000	42000
电压代号 (AC) Voltage code(DC)	706	712	724 *	736	748 *	710	730 *	780
额定电压 V.AC Nominal voltage V.AC	6	12	24	36	48	110	230	380
线圈电阻 Ω Coil resistance Ω	11.5	40	180	370	640	4430	16500	42000

注：带 * 号为常规型号。

外观和尺寸 Appearance and Dimension

CKE-2CS

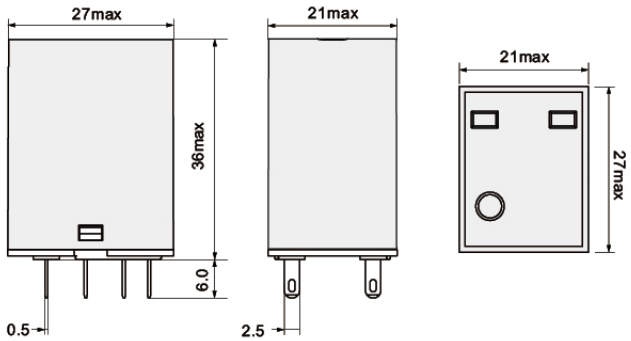

CKE-4CS

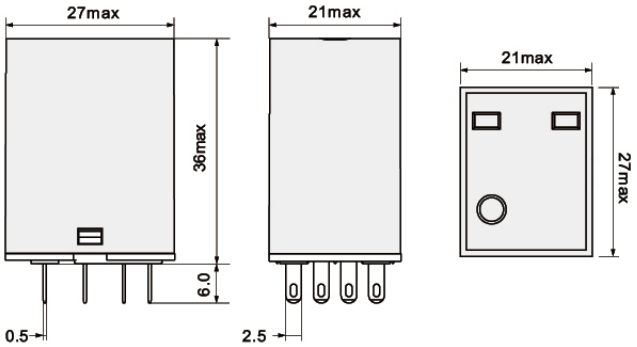

CKL-2CS

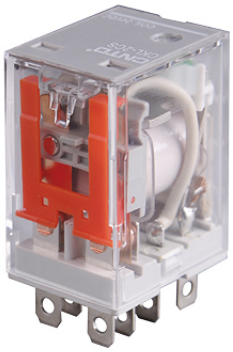

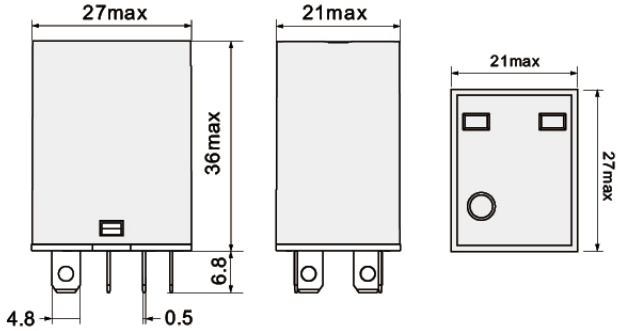

接线图 Wiring Diagram

CKE-2CS

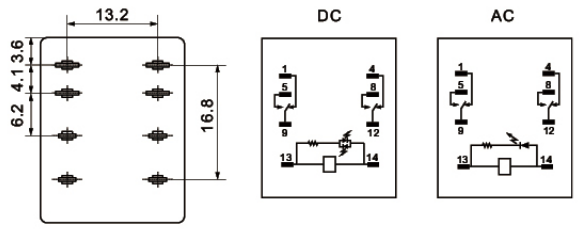

CKE-4CS

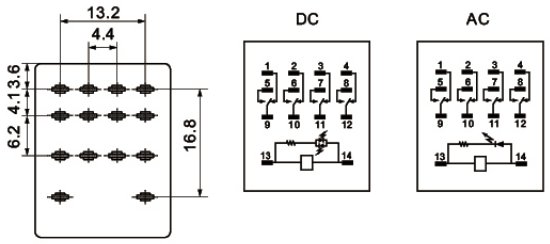

CKL-2CS

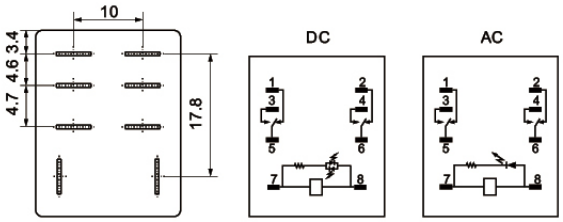

继电器插座
Relay Socket

CYF08A-E

负载电流 Load current	7A
负载电压 Load voltage	300V
介质耐压 Dielectric withstanding voltage	2500VAC/S

继电器插座附件

CRS-E

CYF08A-K

负载电流 Load current	7A
负载电压 Load voltage	300V
介质耐压 Dielectric withstanding voltage	2500VAC/S

继电器插座附件

CRS-K

CYF14A-E

负载电流 Load current	5A
负载电压 Load voltage	300V
介质耐压 Dielectric withstanding voltage	2500VAC/S

继电器插座附件

CRS-E

CYF14A-K

负载电流 Load current	5A
负载电压 Load voltage	300V
介质耐压 Dielectric withstanding voltage	2500VAC/S

继电器插座附件

CRS-K

CTF08A-E

负载电流 Load current	10A
负载电压 Load voltage	300V
介质耐压 Dielectric withstanding voltage	2500VAC/S

继电器插座附件

CRS-E

CTF08A-K

负载电流 Load current	10A
负载电压 Load voltage	300V
介质耐压 Dielectric withstanding voltage	2500VAC/S

继电器插座附件

CRS-K

CUK 通用接线端子
General Connection Terminal

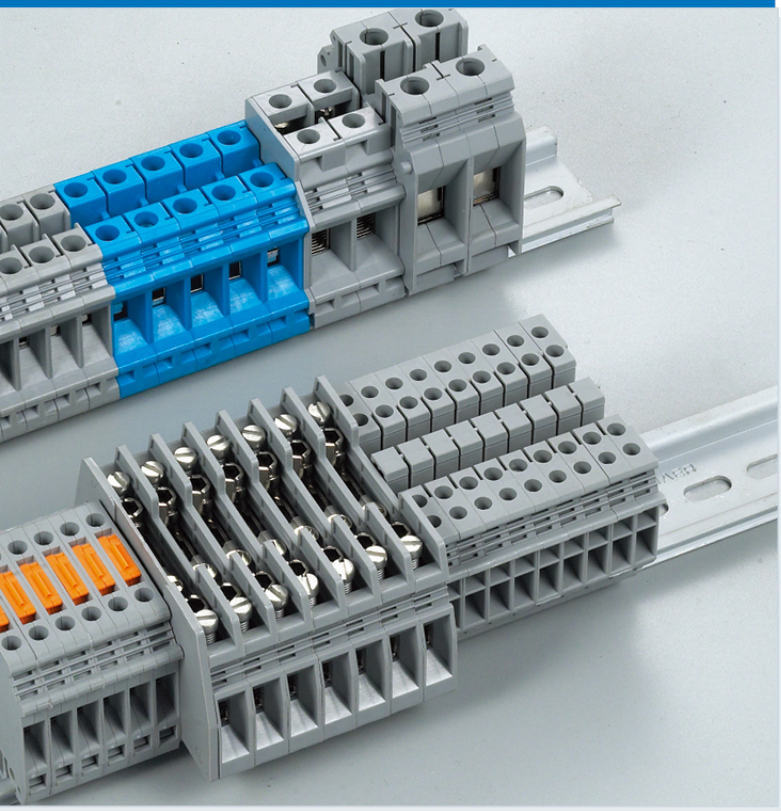

附件参数 Parameters

说明 Instructions

(1) 终端隔板
(1) End clapboard

(2) 中心式联接件:
用于端子中央实现横向桥接，10 位，可分，带 10 枚螺钉。
(2) Center connecting piece:
Use at the center of terminal for transverse bridge connection

(3) 边插式联接件: 2 位
3 位
10 位
(3) Side connecting piece: 2 digit
3 digit
10 digit

(4) 标记号:
常规 1-100，10 位一组，若需特殊印字请说明。
(4) Mark symbol:
1-100, 10 for a group. Please explain if you have special demand.

(5) 隔片: 隔片用于相邻接件间的电气隔离，
可事后插入
(5) Septa: The spacer used in the electric segreagtion among
the adjoint hooknp. Can insert after installation.

(6) 分组隔板
(6) The packet clapboard

(7) 通用终端固定件
(7) Universal terminal fixture

外观和尺寸 Appearance and Dimension

CUK 2.5B

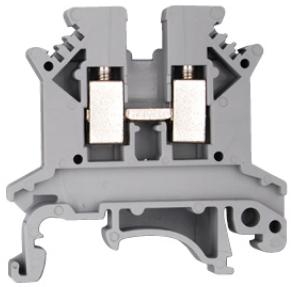

刚性导线 (mm^2)	柔性导线 (mm^2)	
CE 0.2-4 电流 32A	0.2-2.5 电压 800V	配标记条 (ZB6) 在□型、⊔型

CUK 3N

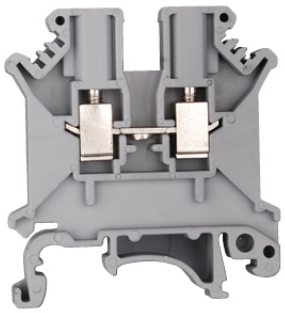

刚性导线 (mm^2)	柔性导线 (mm^2)	
CE 0.2-4 电流 32A	0.2-2.5 电压 800V	配标记条 (ZB5) 在□型、⊔型

CUK 5N

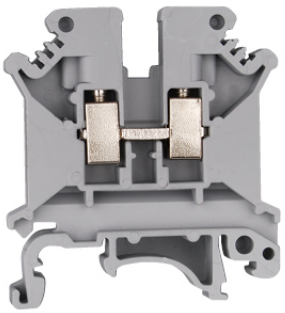

刚性导线 (mm^2)	柔性导线 (mm^2)	
CE 0.2-6 电流 41A	0.2-4 电压 800V	配标记条 (ZB6) 在□型、⊔型

CUK 6N

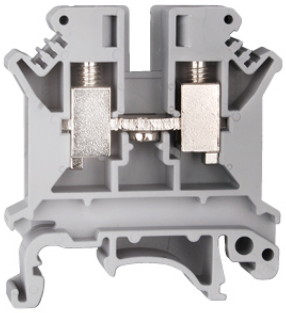

刚性导线 (mm²)	柔性导线 (mm²)	
CE 0.2-10 电流 57A	0.2-6 电压 800V	配标记条 (ZB8) 在□型、⊔型

CUK 10N

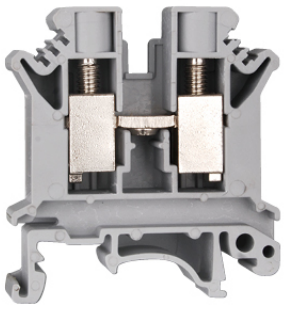

刚性导线 (mm²)	柔性导线 (mm²)	
CE 0.5-16 电流 76A	0.5-10 电压 800V	配标记条 (ZB10) 在□型、⊔型

CUK 16N

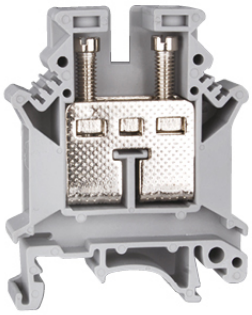

刚性导线 (mm²)	柔性导线 (mm²)	
CE 2-25 电流 101A	4-16 电压 800V	配标记条 (ZB10) 在□型、⊔型

CUK 35

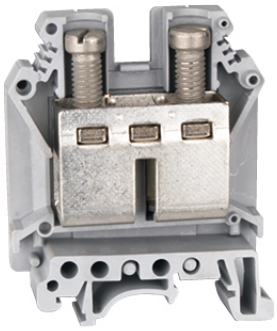

刚性导线 (mm²)	柔性导线 (mm²)	
CE 10-35 电流 125A	10-35 电压 800V	配标记条 (ZB10) 在□型、⊔型

CUKH 50

刚性导线 (mm²)	柔性导线 (mm²)	
CE 16-50 电流 150A	25-50 电压 1000V	配标记条 (ZB10) 在□型、⊔型

CUKH 95

刚性导线 (mm²)	柔性导线 (mm²)	
CE 25-95 电流 232A	35-95 电压 1000V	配标记条 (ZB10) 在□型、⊔型

CUKK 3

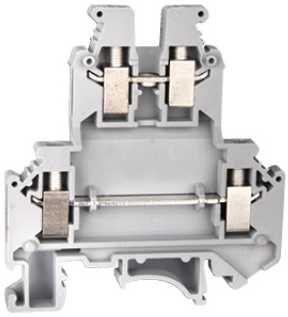

刚性导线 (mm²)	柔性导线 (mm²)	
CE 0.2-4 电流 32A	0.2-2.5 电压 500V	配标记条 (ZB5) 在□型、⊔型

CUKK 5

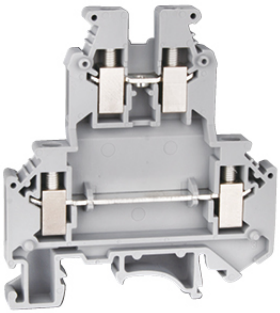

刚性导线 (mm²)	柔性导线 (mm²)	
CE 0.2-4 电流 32A	0.2-4 电压 500V	配标记条 (ZB6) 在□型、⊔型

CUDK4

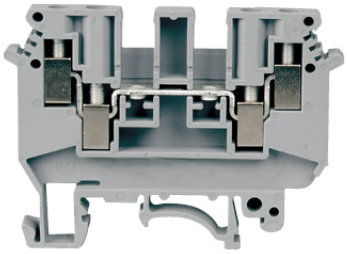

刚性导线 (mm²)	柔性导线 (mm²)	
CE 0.2-6 电流 32A*	0.2-4 电压 690V	配标记条 (ZB6) 在□型、⊔型

*所有连接导线的电流总和不得超过最大负载总和。

CUK 通用接线端子
General Connection Terminal

CUK3-TWIN

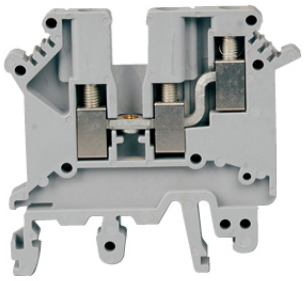

刚性导线 (mm²)	柔性导线 (mm²)	
CE 0.2-2.5 电流 24A*	0.2-2.5 电压 400V	配标记条 (ZB5) 在 ⊏ 型、⊔ 型

*所有连接导线的电流总和不得超过最大负载总和。

CUK5-TWIN

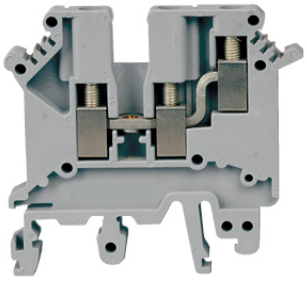

刚性导线 (mm²)	柔性导线 (mm²)	
CE 0.2-4 电流 32A*	0.2-4 电压 500V	配标记条 (ZB6) 在 ⊏ 型、⊔ 型

*所有连接导线的电流总和不得超过最大负载总和。

CUK5-HESI

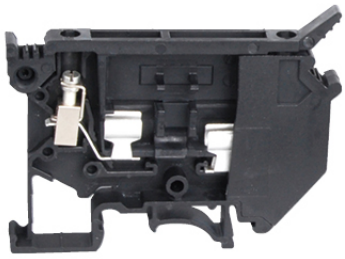

刚性导线 (mm²)	柔性导线 (mm²)	
CE 0.2-4 电流 6.3A	0.2-4 电压 800V	配标记条 (ZB8) 在 ⊏ 型、⊔ 型

CUK10-DREHSI

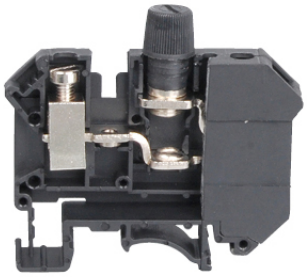

刚性导线 (mm²)	柔性导线 (mm²)	
CE 电流 10A	电压 800V	配标记条 (ZB8) 在 ⊏ 型、⊔ 型

CURTK/S

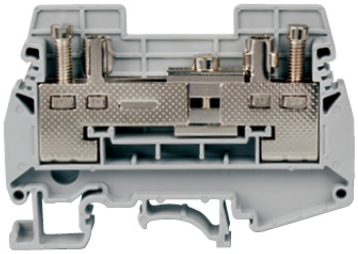

刚性导线 (mm²)	柔性导线 (mm²)	
CE 0.5-10 电流 57A	0.5-6 电压 400V	配标记条 (ZB8) 在 ⊏ 型、⊔ 型

CUK5-MTK-P/P

刚性导线 (mm²)	柔性导线 (mm²)	
CE 0.2-4 电流 16A	0.2-4 电压 800V	配标记条 (ZB6) 在 ⊏ 型、⊔ 型

CBD 双层板式螺钉压线端子
Double-layer Plate Type Screw Crimping Terminal

CBD-10

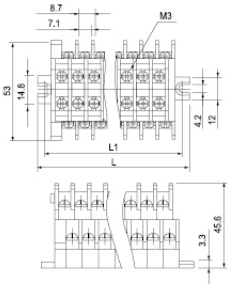

L=21.6+8.7 × n

L1=15.2+8.7 × n

n=No. of Poles

CBD-20

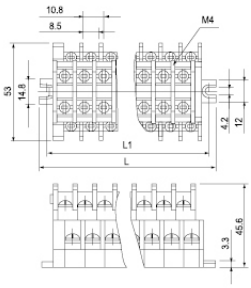

L=20.6+10.8 × n

L1=15.2+10.8 × n

n=No. of Poles

外观和尺寸 Appearance and Dimension

CUSLKG 2.5

	刚性导线 (mm²)	柔性导线 (mm²)
CE	0.2-4 电流 32A	0.2-2.5
配标记条 (ZB6)	在□ 型、□ 型	

CUSLKG 3

	刚性导线 (mm²)	柔性导线 (mm²)
CE	0.2-4 电流 34A	0.2-2.5
配标记条 (ZB5)	在□ 型、□ 型	

CUSLKG 5

	刚性导线 (mm²)	柔性导线 (mm²)
CE	0.2-4 电流 34A	0.2-4
配标记条 (ZB6)	在□ 型、□ 型	

CUSLKG 6

	刚性导线 (mm²)	柔性导线 (mm²)
CE	0.2-10 电流 37A	0.2-6
配标记条 (ZB8)	在□ 型、□ 型	

CUSLKG 10

	刚性导线 (mm²)	柔性导线 (mm²)
CE	0.5-16 电流 76A	0.5-10
配标记条 (ZB10)	在□ 型、□ 型	

CUSLKG 16

	刚性导线 (mm²)	柔性导线 (mm²)
CE	2.5-25 电流 101A	4-16
配标记条 (ZB10)	在□ 型、□ 型	

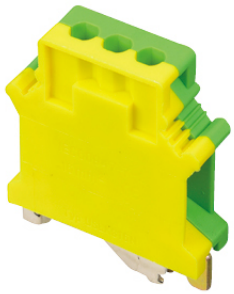

CUSLKG 35

	刚性导线 (mm²)	柔性导线 (mm²)
CE	10-35 电流 125A	10-35
配标记条 (ZB10)	在□ 型、□ 型	

CUSLKG 50

	刚性导线 (mm²)	柔性导线 (mm²)
CE	16-50 电流 150A	25-50
配标记条 (ZB10)	在□ 型、□ 型	

CBC 卡式组立端子盘
Cassette Assembly Terminal Block

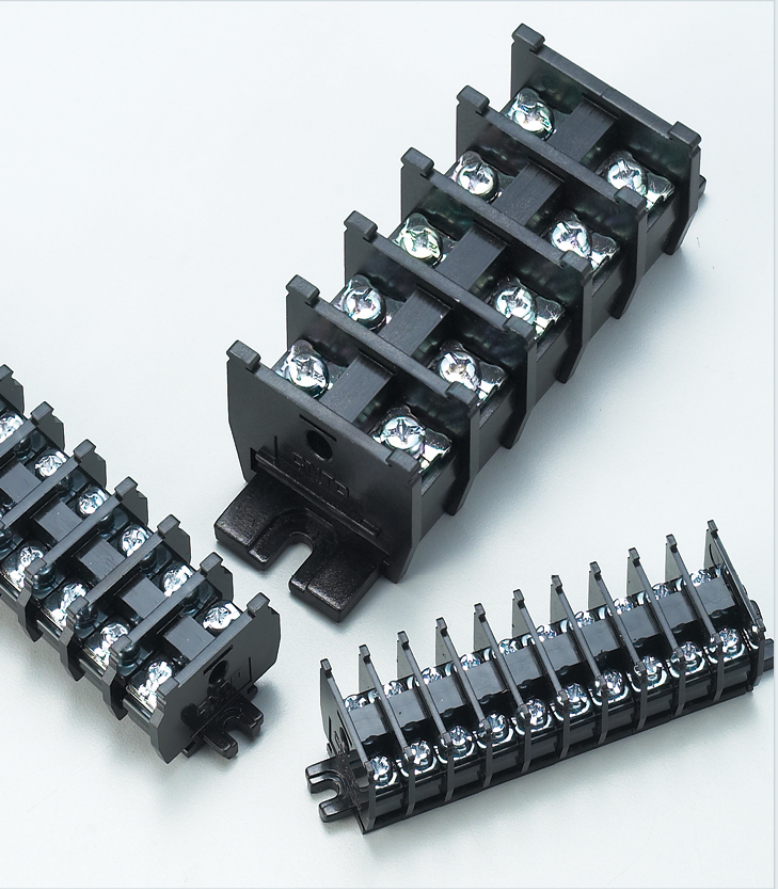

特点 Features

- 10P 以下，免除串接导轨，2P 直接互压即可，安装方便快速
- 10P 以上长度，附加导轨，20P 以上可分成二段或三段先固定一段，可不受长度限制加长，且十分坚固
- PC 材料，耐高温，韧性强不碎裂
- Under 10P: no need for concatenated guide rail. 2P:can be mutual pressed directly. Installation is convenient and fast
- More than 10P: additional guide rail. More than 20P: can be divided into two or three parts and settle one part, length is not limited
- PC material, heat resistance, strong structure

外观和尺寸 Appearance and Dimension

CBC-10

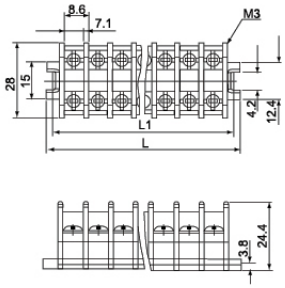

L=16.7+8.6xn
L1=10.3+8.6xn
n=P 数 No. of poles

CBC-20

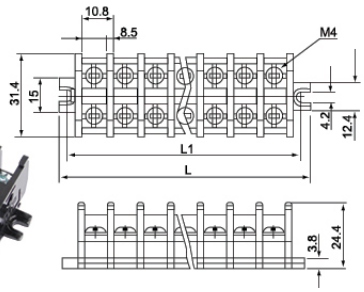

L=17.3+10.8xn
L1=11.2+10.8xn
n=P 数 No. of poles

CBC-30

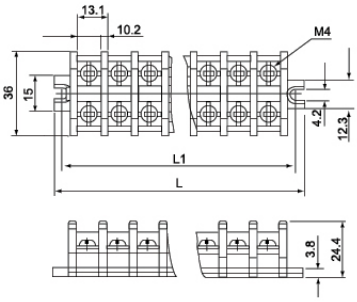

L=18+13.1xn
L1=11.5+13.1xn
n=P 数 No. of poles

CBC-60

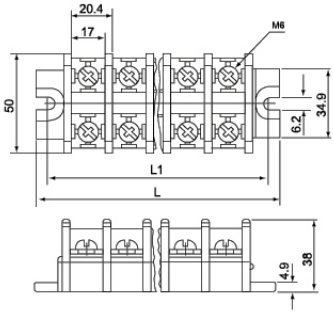

L=33.5+20.4xn
L1=18.5+20.4xn
n=P 数 No. of poles

CBC-100

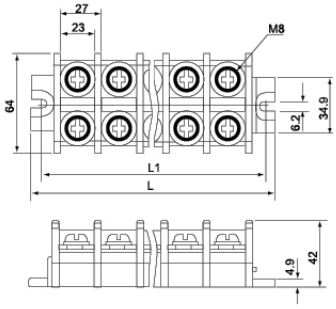

L=34+27xn
L1=19+27xn
n=P 数 No. of poles

CBR 板式螺钉压线端子排
Plate Type Screw Crimping Terminal Block

CNTD® 昌得电气

特点 Features

- 组合时，以端子盘之一端勾住道轨骼一端用力压下即可
- 拆卸时，以一字起子扦入有沟槽之一端，往外撬起即可拆下
- PC 材料，耐高温，韧性强不碎裂

- Combining: one terminal plate end hooks slide under the skeletons end and press hard
- Disassembly: with straight screwdriver stand into a groove, pry up one end
- PC material, heat resistance, strong structure

外观和尺寸 Appearance and Dimension

CBR-10

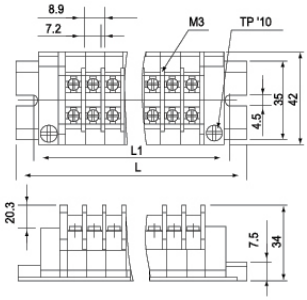

L=38+8.9 × n
L1=22.5+8.9 × n
n=P 数 No. of poles

CBR-20

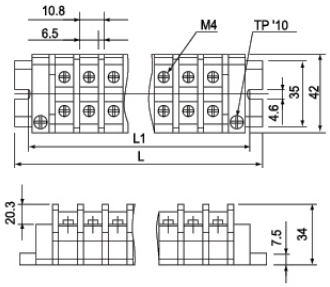

L=38+10.8 × n
L1=22.5+10.8 × n
n=P 数 No. of poles

CBR-30

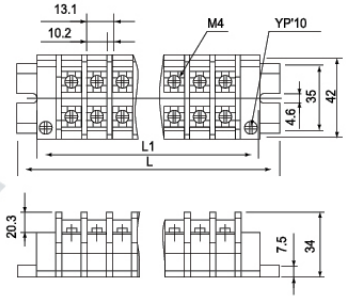

L=38+13.1 × n
L1=22.5+13.1 × n
n=P 数 No. of poles

CBR-60

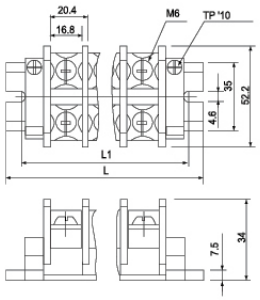

L=38+20.4 × n
L1=22.5+20.4 × n
n=P 数 No. of poles

CBR-100

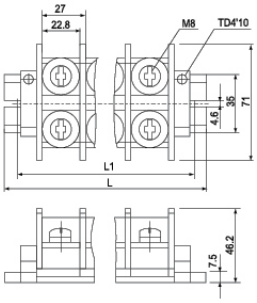

L=38+27 × n
L1=22.5+27 × n
n=P 数 No. of poles

D-CUK2.5 端板 End plate

D-CUK3-10 端板 End plate

D-CUK16端板 End plate

D-CUK3/5 端板 End plate

D-CUKDK4 端板 End plate

D-CUK5-TWIN 端板 End plate

D-CURTK 端板 End plate

CTS-K 隔片 Spacers

FBI/10-5
中心连接件 Center connections

FBI/10-6
中心连接件 Center connections

FBI/10-8
中心连接件 Center connections

FB10-RTK/S
中心连接件 Center connections

FBI/10-10
中心连接件 Center connections

FBI/10-12
中心连接件 Center connections

FBI/10-15
中心连接件 Center connections

EB10-5
边扦式连接件 Side stick-type connectortions

EB10-6
边扦式连接件 Side stick-type connectortions

EB10-8
边扦式连接件 Side stick-type connectortions

ZB5
标记牌 Mark card

ZB6
标记牌 Mark card

ZB8
标记牌 Mark card

ZB10
标记牌 Mark card

KLM-A
固定件 Fixing

CUBE/A
固定件 Fixing

CUBE/D
固定件 Fixing

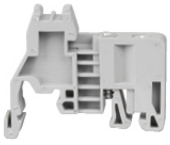
E/CUK
固定件 Fixing

CBR-F
CBR 固定件 CBR Fixing

CBR-F1
CBR 固定件 CBR Fixing

CBC-F
CBC 固定件 CBC Fixing

CNTD®

昌得电气科技有限公司
CNTD ELECTRIC TECHNOLOGY CO., LTD.

电话：0577-61802222
传真：0577-61802822
邮箱：cntd@cntd.com.cn
地址：浙江省乐清市乐清经济开发区纬十一路 258 号

Tel: 0086-577-62855833
Fax: 0086-577-61802822
Email: cntd@cntd.com
Add.: NO. 258. Wei Eleven Road, Yueqing Economic Development Zone, Yueqing City, Zhejiang Province, P.R. China

www.cntd.com.cn
（中文）

www.cntd.com
（English）

手册仅供参考

* 昌得电气科技有限公司进行着持续的创新，因此本手册中提供的信息仅供参考。请勿将本手册作为产品安装指南使用。非常规使用场合下的安装、操作和维护请咨询昌得电气科技有限公司的服务人员。

THE CATALOGUE IS FOR REFERENCE ONLY

* CNTD Electric Technology Co., Ltd. keeps innovating. The information in this catalogue is for reference only. Please do not use the catalogue as a formal installation guide.For installation, operation and maintenance of unconventional applications, please consult the service personnel of CNTD Electric Technology Co., Ltd. for further support.

产品正确用法

* 产品应当被使用于一个确保产品运行时各项参数不超过额定值的环境中。产品被使用的系统中的相关风险，应当是受分析且通过多重方案控制的。请勿将产品单独用于例如紧急停止装置等涉及人身安全和财产的场合。

PROPER USE OF PRODUCT

* The product must be used in an environment ensures that the product's operating parameters do not exceed the rating value. The risks associated with the system in which the product is used should be analyzed and controlled by multiple measures. Do not singly use the product in situations involving personal safety and property safety such as emergency stop device.

201908 Version