Wire end sleeve insulated twin 2.5 mm² - 10 mm
A02552TWIN

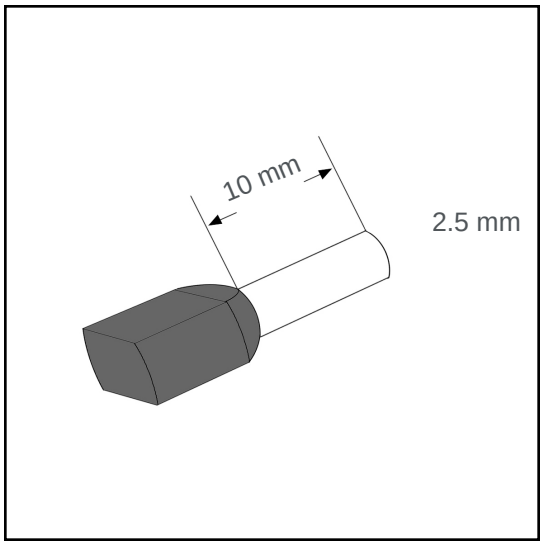

for two wires in one ferrule

Datasheet:

Cross section (mm²):	2.5
AWG:	2x14
Length (mm):	10
Color:	grey
Material:	Cu-DHP / Polypropylene
Surface:	tin plated
Minimum thickness of tin coating:	3 µm
Max. Temp:	105°C
REACH/RoHS:	confirmed
Certificates:	UL

Packing sizes:

250 pcs.:	Part no.: 005817
10 x 100 pcs.:	Part no.: 005816
25000 pcs.:	Part no.: 005266

Dimensions (mm):

l1	l2	d1	s1	d2	s2	d3
18.5	10	2.9	0.2	4	0.4	7.6

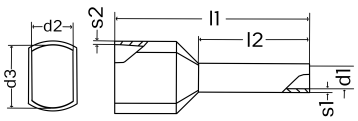

©2020 GLW GmbH

Steinbeisstr. 2 · 88353 Kisslegg · +49 7563 9123-0 · info@glw.de