LPXLPB4

LED INTEGRATED LAMP-HOLDER, STEADY LIGHT Ø22MM PLATINUM SERIES, SCREW TERMINATION, 12...30VAC/DC. RED



Product designation				LED elements steady light
Product type designation				LPXLP
General characteristics				
Colour				Red
Electrical characteristics				
Supply voltage (AC)			V	12…30
Supply voltage (DC)			V	12…30
Operations				
Electrical life			hours	100000
Mechanical features				
Tightening torque for terminals max			Nm	1
Conductor section				
	AWG/kcmil conductor section			
		max		12
	IEC			
		max	mm²	1 or 2 / 2.5
Mounting adapter				LPXAU120
Weight			g	16
Ambient conditions				
Temperature				
	Operating temperature			
		min	°C	-25
		max	°C	+70
	Storage temperature			
		min	°C	-40
		max	°C	+85

Dimensions

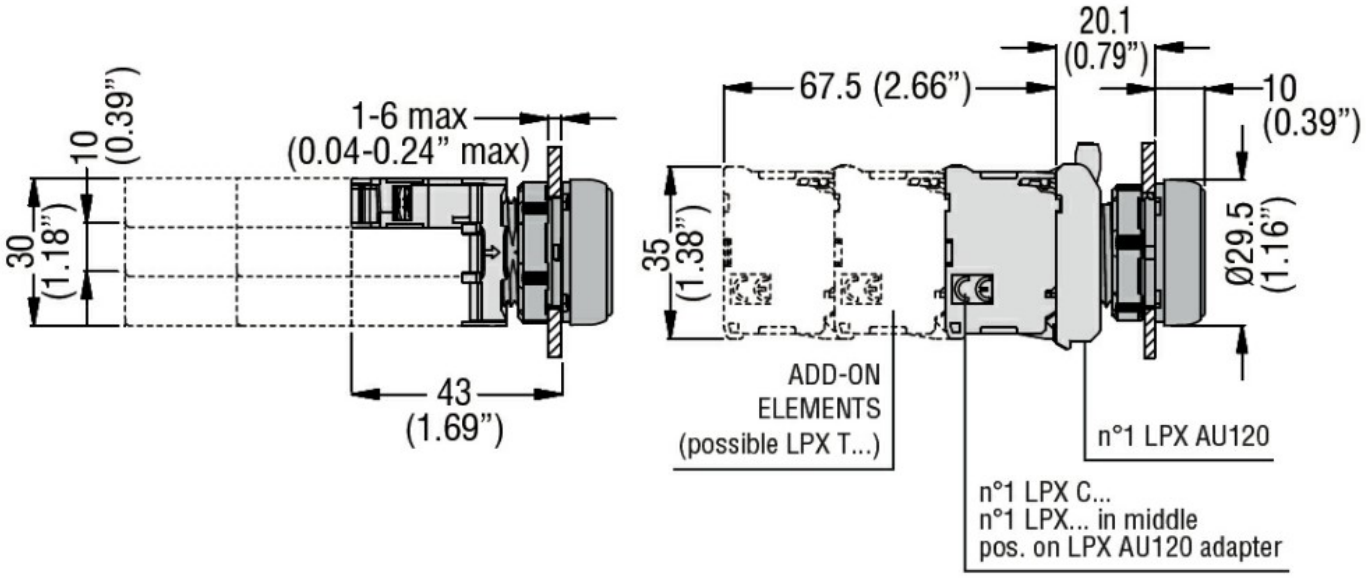

The characteristics described in this document are subject to updates or modifications at any time. The descriptions, technical and functional information, illustrations and instructions in this brochure are purely illustrative, and are consequently not contractually binding

LPXLPB4

LED INTEGRATED LAMP-HOLDER, STEADY LIGHT Ø22MM PLATINUM SERIES, SCREW TERMINATION, 12...30VAC/DC. RED

Wiring diagrams

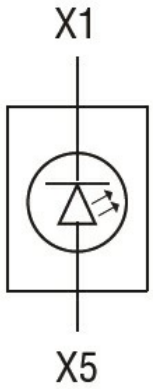

Certifications and compliance

Compliance

CSA C22.2 n° 14
IEC/EN/BS 60947-1
IEC/EN/BS 60947-5-1
UL508

Certificates

CCC
cULus
EAC
RINA
UL

ETIM classification

ETIM 8.0	EC000204 - Lamp holder block for control circuit devices

The characteristics described in this document are subject to updates or modifications at any time. The descriptions, technical and functional information, illustrations and instructions in this brochure are purely illustrative, and are consequently not contractually binding